KOMATSU

PC
190

Hydraulic Excavator

PC190LC/NLC-8

ENGINE POWER
97 kW / 130 HP @ 2.200 rpm

OPERATING WEIGHT
PC190LC-8: 19.050 - 20.020 kg
PC190NLC-8: 18.820 - 19.350 kg

BUCKET CAPACITY
max. 1,14 m^3

Walk-Around

The Komatsu Dash 8 crawler excavators set new worldwide standards for construction equipment. Operator safety and comfort is a focal point in their design, and their outstanding performance and specifications will contribute directly to the success of your business. With standard auxiliary hydraulic systems and quick-coupler power lines, these machines are ready to take on any job, whenever and wherever you need it done. Safely rely on Komatsu's 80 years of experience and commitment to Quality and Durability: your Dash 8 crawler excavator will quickly become your number one business partner.

Powerful and environmentally friendly

- Low consumption ecot3 engine
- Komatsu integrated hydraulic system
- Eco-gauge and idle caution
- Reduced wastage

Total versatility

- Ideal for a wide range of applications
- 5 working modes
- Wide choice of options
- Built-in versatility

PC190-8

ENGINE POWER
97 kW / 130 HP @ 2.200 rpm

OPERATING WEIGHT
PC190LC-8: 19.050 - 20.020 kg
PC190NLC-8: 18.820 - 19.350 kg

BUCKET CAPACITY
max. 1,14 m³

Highest safety standards

- Safe SpaceCab™
- Rear view camera
- Optimal jobsite safety
- Safe access, easy maintenance
- Falling Object Protection System (FOPS) optional

First-class operator comfort

- Wide, spacious cab
- Low noise design
- Low vibration levels
- Pressurised cab
- Large, widescreen TFT monitor panel

KOMTRAX
Komatsu Satellite
Monitoring System

Quality you can rely on

- Reliable and efficient
- Rugged design
- Komatsu-quality components
- Extensive dealer support network

Total Versatility

Ideal for a wide range of applications

Powerful and precise, the Komatsu PC190-8 is equipped to efficiently carry out any task your business requires. On big sites or small, for digging, trenching, landscaping or site preparation, the Komatsu original equipment hydraulic system always ensures maximum productivity and control.

5 working modes

Power, Lifting, Breaker, Attachment, and Economy.
The PC190-8 features 5 selectable working modes that optimise performance and fuel usage. The Economy mode can be adjusted for an ideal balance between power and economy to match your work. The oil flow delivered to hydraulic attachments is adjustable directly on the class-leading wide screen monitor panel.

Built-in versatility

To allow the use of many attachments, such as buckets, breakers or demolition tools, a power supply for a hydraulic quick coupler with adjustable pressure settings, and an additional hydraulic circuit controlled by a foot pedal and a sliding joystick push button are standard on the PC190-8. A second optional auxiliary line is also available for attachments that require extra hydraulic actuation.

A wide choice of options

With a choice of different styles of boom, arm and undercarriage, you can configure the PC190-8 to match specific demands for transport, working envelope or duty. Extra hydraulic arrangements are available for every boom and arm configuration, making sure that the machine always contributes strongly to your business.

KOMATSU
PC
190
LC

Powerful and Environmentally Friendly

Low consumption ecot3 engine

The Komatsu SAA4D107E-1 engine provides high torque, a better performance at low speed and low fuel consumption. This ecot3 engine features a new combustion chamber design with optimised ignition and combustion timing. The operating pressure of the new common rail system was increased for improved injection and fuel efficiency. The air-to-air charge cooler reduces the temperature of the compressed air supplied by the turbo charger to the cylinders, and further improves fuel consumption.

Komatsu integrated hydraulic system

The PC190-8 is a highly responsive and productive machine with all major hydraulic parts designed and manufactured by Komatsu. The electronic Closed Load Sensing hydraulic System (CLSS) offers complete control during individual or combined movements - without sacrificing performance or productivity.

Eco-gauge and idle caution

The unique ECO-gauge helps the operator reduce emissions and fuel consumption for environmentally friendly and energy saving operations. And to further avoid wasting fuel when the machine is not actually working, a standard-fit idle caution is displayed if the engine idles for 5 minutes or more.

Meets EU Stage IIIA

The new Komatsu ecot3 engine technology reduces NOx and particle emissions, fuel consumption and noise level. The Komatsu SAA4D107E-1 engine is certified for EPA Tier III and EU Stage IIIA emission regulations. To further reduce the machine's emissions, a Diesel Particulate Filter is also available.

Automatic greasing system

Idle caution

Reduced wastage

To avoid spillage of excess grease – and prolong the life of your machine – the PC190-8 can be equipped with an automatic greasing system that provides precisely the correct amount of grease when and where it's required.

First-Class Operator Comfort

Wide spacious cab

The wide and spacious cab includes a newly designed heated air suspension seat with a high backrest. The seat height and longitudinal inclination are easily adjusted with a pull-up lever. You can also set the operational posture of the armrest and the position of the console or recline the seat all the way and place it into a fully flat state with the headrest attached.

Pressurised cab

An automatic air conditioner, an air filter and a positive internal air pressure (60 Pa) combine to prevent external dust from entering the cab.

Low noise design

Komatsu Dash 8 crawler excavators feature the lowest in-class external noise levels and are especially well-suited for work in confined spaces or urban areas. Reduced fan speed, a large capacity radiator, and the optimal usage of sound insulation and of sound absorbing materials help to make noise levels inside Dash 8 excavators comparable to those inside an executive car.

Cab damper mounting

The built-in stability of the Komatsu PC190-8, combined with a highly rigid deck and a sprung multi-layer viscous mount system, drastically reduces vibration levels for the operator.

Automatic air conditioner

Hot and cool box

Joysticks with proportional control button for attachments

Large, widescreen TFT monitor

To enable safe, accurate and smooth work, the user friendly monitor is the highly intuitive user interface for the machine's Equipment Management and Monitoring System (EMMS). Multilingual and with all essential information available at a glance, it features simple and easy to operate switches and multifunction keys that provide the operator with fingertip access to a wide range of functions and operating information.

Highest Safety Standards

Safe SpaceCab™

Specifically designed for Komatsu excavators, the Dash 8 cab has a tubular steel frame. It provides very high shock absorbency, impact resistance and durability. The seat belt is designed to keep the operator in the safety zone of the cab in the event of a roll-over. At your request, the Komatsu PC190-8 can also be fitted with an ISO 10262 Level 2 Falling Object Protective System (FOPS).

Safe and easy maintenance

Thermal guards are placed around high temperature parts of the engine. The fan belt and pulleys are well protected and in case of damage, fire risk is reduced by a pump/engine partition that prevents hydraulic oil from spraying onto the engine.

Optimal job site safety

Safety features on the Komatsu PC190-8 comply with the latest industry standards and work together as a system to minimise risks to personnel in and around the machine. An audible travel alarm further promotes job site safety. Very durable anti-slip plates – with additional high friction covering – maintain long term traction performance.

Rear view camera

A standard fitment camera gives an exceptionally clear view of the rear work zone on the wide-screen monitor panel. Large mirrors on both sides ensure that machine visibility meets the latest ISO standards.

Rear view camera

Safe SpaceCab™

Anti-slip plates

KOMATSU
PC
190
LC

Quality You Can Rely On

Reliable and efficient

Productivity is the key to success – all major components of the PC190-8 are designed and directly manufactured by Komatsu. Essential machine functions are perfectly matched for a highly reliable and productive machine.

Rugged design

Maximum toughness and durability – along with top class customer service – are the cornerstones of Komatsu's philosophy. Single piece plates and castings are used in key areas of the machine's structure for good load distribution. Highly durable rubbing strips on the underside of the arm protect the structure from material falling from the bucket.

Komatsu-quality components

With the latest computer design techniques and a thorough test programme, Komatsu's global know-how produces machines that are designed, manufactured and tested to meet your highest standards.

Extensive dealer support network

The extensive Komatsu distribution and dealer network is standing by to help keep your fleet in optimum condition. Customised servicing packages are available, with express availability of spare parts, to make sure that your Komatsu will continue to perform at its peak.

Cast boom foot

Single piece boom plates

KOMATSU
PC
190
LC

KOMATSU
PC
190
LC

Komatsu Satellite Monitoring System

KOMTRAX™ is a revolutionary machine tracking system designed to save you time and money. You can now monitor your equipment anytime and anywhere. Use valuable machine data received via the KOMTRAX™ web site to optimise your maintenance planning and machine performances.

KOMTRAX™ can assist you with:

Full machine monitoring

Get detailed operation data to know when your machines are used and how productive they are.

Total Fleet Management

Keep track of the location of your machines at all times and discourage unapproved usage or theft.

Complete machine status

Receive warnings, alerts and cautions, via a web site or by e-mail, to help with maintenance planning and for longer machine life.

For further details on KOMTRAX™, please ask your Komatsu dealer for the latest KOMTRAX™ brochure.

Machine working time - With the "daily working record" chart, get precise engine running time data: when your machine was started and when it was shut down, as well as total engine running time.

Maintenance planning - To increase productivity and improve maintenance planning, alerts indicate when items such as filters or oil must be replaced.

Fleet location - The machine list instantly locates all your machines, even those in other countries.

Machine tracking during transport - When your machine is transported, KOMTRAX™ sends travel messages to the web site or by e-mail to inform you of its progress, and confirms when it reaches its destination.

Alarm notifications - You can receive notification of alarms both via the KOMTRAX™ website and by e-mail.

Added security - The "engine lock" feature allows to program when a machine's engine can be started. And with "geo-fence", KOMTRAX™ sends notification every time your machine moves in or out of a predetermined operating area.

Easy Maintenance

Side-by-side cooling

Since the radiator, aftercooler and oil cooler are arranged in parallel, it is easy to clean, remove and install them.

Easy access to the engine oil filter and fuel drain valve

The engine oil filter and fuel drain valve are mounted remotely to improve accessibility.

Long-life oil filters

The hydraulic oil filter uses high-performance filtering material for long element replacement intervals, which significantly reduces maintenance costs.

Water separator

This is standard equipment which removes any water that has become mixed with the fuel, preventing fuel system damage.

Washable floor

The floor is easy to keep clean. The gently inclined surface has a flanged floormat and drainage holes to facilitate runoff.

Inclined track frame

The track frame is sloped so that dirt will not accumulate and can be removed easily.

Flexible warranty

When you purchase Komatsu equipment, you gain access to a broad range of programmes and services that have been designed to help you get the most from your investment. For example, Komatsu's Flexible Warranty Programme provides a range of extended warranty options on the machine and its components. These can be chosen to meet your individual needs and activities. This programme is designed to help reduce total operating costs.

ENGINE

Model ..... Komatsu SAA4D107E-1
Type .....Common rail direct injection, water-cooled, emissionised, turbocharged, after-cooled diesel
Engine power
at rated engine speed ..... 2.200 rpm
ISO 14396 .....97,0 kW / 130 HP
ISO 9249 (net engine power) .....92,0 kW / 123 HP
No. of cylinders 4
Bore × stroke .....107 × 120 mm
Displacement.....4,46 ltr
Battery .....2 × 12 V/120 Ah
Alternator.....24 V/60 A
Starter motor ..... 24 V/4,5 kW
Air filter type .....Double element type with monitor panel dust indicator and auto dust evacuator
Cooling ..... Suction type cooling fan with radiator fly screen

HYDRAULIC SYSTEM

Type ..... HydrauMind. Closed-centre system with load sensing and pressure compensation valves
Additional circuits..... 2 additional circuits with proportional control can be installed
Main pump .....Variable displacement piston pump supplying boom, arm, bucket, swing and travel circuits
Maximum pump flow..... 312 ltr/min
Relief valve settings
Implement .....380 bar
Travel.....380 bar
Swing .....295 bar
Pilot circuit .....33 bar

SERVICE REFILL CAPACITIES

Fuel tank.....280 ltr
Radiator.....17,3 ltr
Engine oil.....16,0 ltr
Swing drive.....4,5 ltr
Hydraulic tank .....121 ltr
Final drive (each side).....4,5 ltr

SWING SYSTEM

Type ..... Axial piston motor driving through planetary double reduction gearbox
Swing lock ..... Electrically actuated wet multi disc brake integrated into swing motor
Swing speed.....0 - 12 rpm
Swing torque ..... 44,3 kNm

DRIVES AND BRAKES

Steering control .....2 levers with pedals giving full independent control of each track
Drive method ..... Hydrostatic
Travel operation .....Automatic 2-speed selection
Gradeability .....70%, 35°
Max. travel speeds
Lo / Hi .....3,4 / 5,5 km/h
Maximum drawbar pull.....15.950 kg
Brake system..... Hydraulically operated discs in each travel motor

UNDERCARRIAGE

Construction.....X-frame centre section with box section track-frames
Track assembly
Type .....Fully sealed
Shoes (each side) 45
Tension.....Combined spring and hydraulic unit
Rollers
Track rollers (each side) 7
Carrier rollers (each side) 2

ENVIRONMENT

Engine emissions ..... Fully complies with EU Stage IIIA exhaust emission regulations
Noise levels
LwA external .....102 dB(A) (2000/14/EC Stage II)
LpA operator ear.....68 dB(A) (ISO 6396 dynamic test)
Vibration levels (EN 12096:1997)*
Hand/arm .....≤ 2,5 m/s² (uncertainty K = 0,48 m/s²)
Body .....≤ 0,5 m/s² (uncertainty K = 0,23 m/s²)
* for the purpose of risk assessment under directive 2002/44/EC, please refer to ISO/TR 25398:2006.

OPERATING WEIGHT (APPR.)

	MONO BOOM				TWO-PIECE BOOM			
	PC190LC-8		PC190NLC-8		PC190LC-8		PC190NLC-8	
Triple grouser shoes	Operating weight	Ground pressure	Operating weight	Ground pressure	Operating weight	Ground pressure	Operating weight	Ground pressure
500 mm	–	–	18.820 kg	0,50 kg/cm²	–	–	19.350 kg	0,51 kg/cm²
600 mm	19.050 kg	0,44 kg/cm²	–	–	19.580 kg	0,47 kg/cm²	–	–
700 mm	19.270 kg	0,39 kg/cm²	–	–	19.800 kg	0,41 kg/cm²	–	–
800 mm	19.490 kg	0,34 kg/cm²	–	–	20.020 kg	0,36 kg/cm²	–	–

Operating weight, including specified work equipment, 2,6 m arm, 495 kg bucket, operator, lubricant, coolant, full fuel tank and the standard equipment.

Dimensions & Performance Figures

MACHINE DIMENSIONS		PC190LC-8	PC190NLC-8
A	Overall width of upper structure	2.490 mm	2.490 mm
B	Overall height of cab	3.030 mm	3.030 mm
C	Overall length of basic machine	4.420 mm	4.420 mm
D	Tail length	2.390 mm	2.390 mm
	Tail swing radius	2.435 mm	2.435 mm
E	Clearance under counterweight	1.055 mm	1.055 mm
F	Machine tail height	2.090 mm	2.090 mm
G	Ground clearance	440 mm	440 mm
H	Tumbler centre distance	3.275 mm	3.275 mm
I	Track length	4.065 mm	4.065 mm
J	Track gauge	2.200 mm	2.040 mm
K	Track shoe width	600, 700, 800 mm	500, 600, 700, 800 mm
L	Overall track width with 500 mm shoe	–	2.540 mm
	Overall track width with 600 mm shoe	2.800 mm	2.640 mm
	Overall track width with 700 mm shoe	2.900 mm	2.740 mm
	Overall track width with 800 mm shoe	3.000 mm	2.840 mm

MONO BOOM

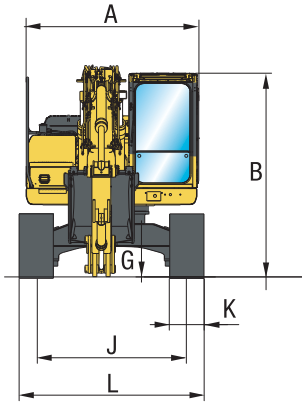

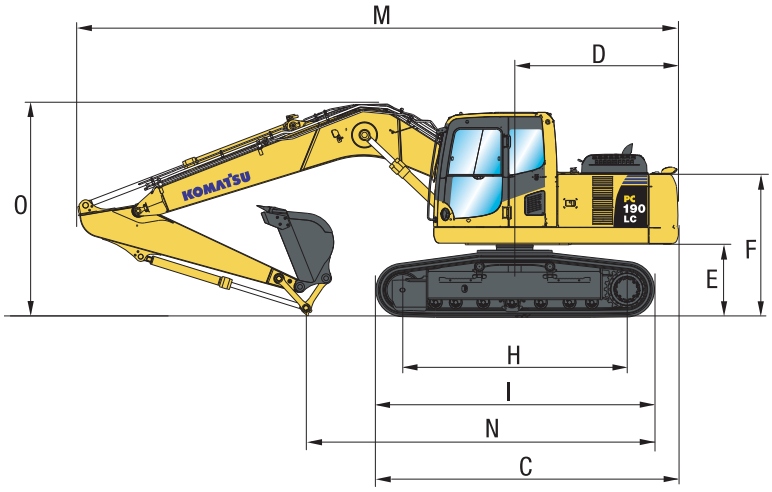

TWO-PIECE BOOM

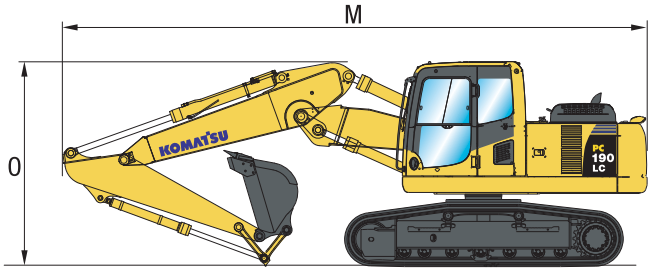

TRANSPORT DIMENSIONS		MONO BOOM			TWO-PIECE BOOM		
	Arm length	2,25 m	2,6 m	2,9 m	2,25 m	2,6 m	2,9 m
M	Transport length	8.770 mm	8.770 mm	8.770 mm	8.490 mm	8.490 mm	8.480 mm
N	Length on ground (transport)	5.180 mm	4.810mm	4.615 mm	5.230 mm	4.875 mm	4.710 mm
O	Overall height (to top of boom)	3.055 mm	3.090 mm	3.170 mm	2.940 mm	2.980 mm	3.030 mm

MAX. BUCKET CAPACITY AND WEIGHT

	MONO BOOM					
Arm length	**2,25 m**		**2,6 m**		**2,9 m**	
Material weight up to 1,2 t/m³	1,14 m³	695 kg	1,14 m³	695 kg	0,94 m³	615 kg
Material weight up to 1,5 t/m³	0,94 m³	615 kg	0,94 m³	615 kg	0,75 m³	530 kg
Material weight up to 1,8 t/m³	0,75 m³	530 kg	0,75 m³	530 kg	0,66 m³	495 kg

	TWO-PIECE BOOM					
Arm length	**2,25 m**		**2,6 m**		**2,9 m**	
Material weight up to 1,2 t/m³	1,14 m³	695 kg	1,14 m³	695 kg	0,94 m³	615 kg
Material weight up to 1,5 t/m³	0,94 m³	615 kg	0,94 m³	615 kg	0,75 m³	530 kg
Material weight up to 1,8 t/m³	0,75 m³	530 kg	0,75 m³	530 kg	0,66 m³	495 kg

Max. capacity and weight have been calculated according to ISO 10567:2007.
Please consult with your distributor for the correct selection of buckets and attachments to suit the application.

BUCKET AND ARM FORCE

Arm length	2,25 m	2,6 m	2,9 m
Bucket digging force	11.500 kg	11.500 kg	11.500 kg
Bucket digging force at PowerMax	12.500 kg	12.500 kg	12.500 kg
Arm crowd force	9.050 kg	8.200 kg	7.550 kg
Arm crowd force at PowerMax	9.700 kg	8.800 kg	8.100 kg

Working Range

MONO BOOM

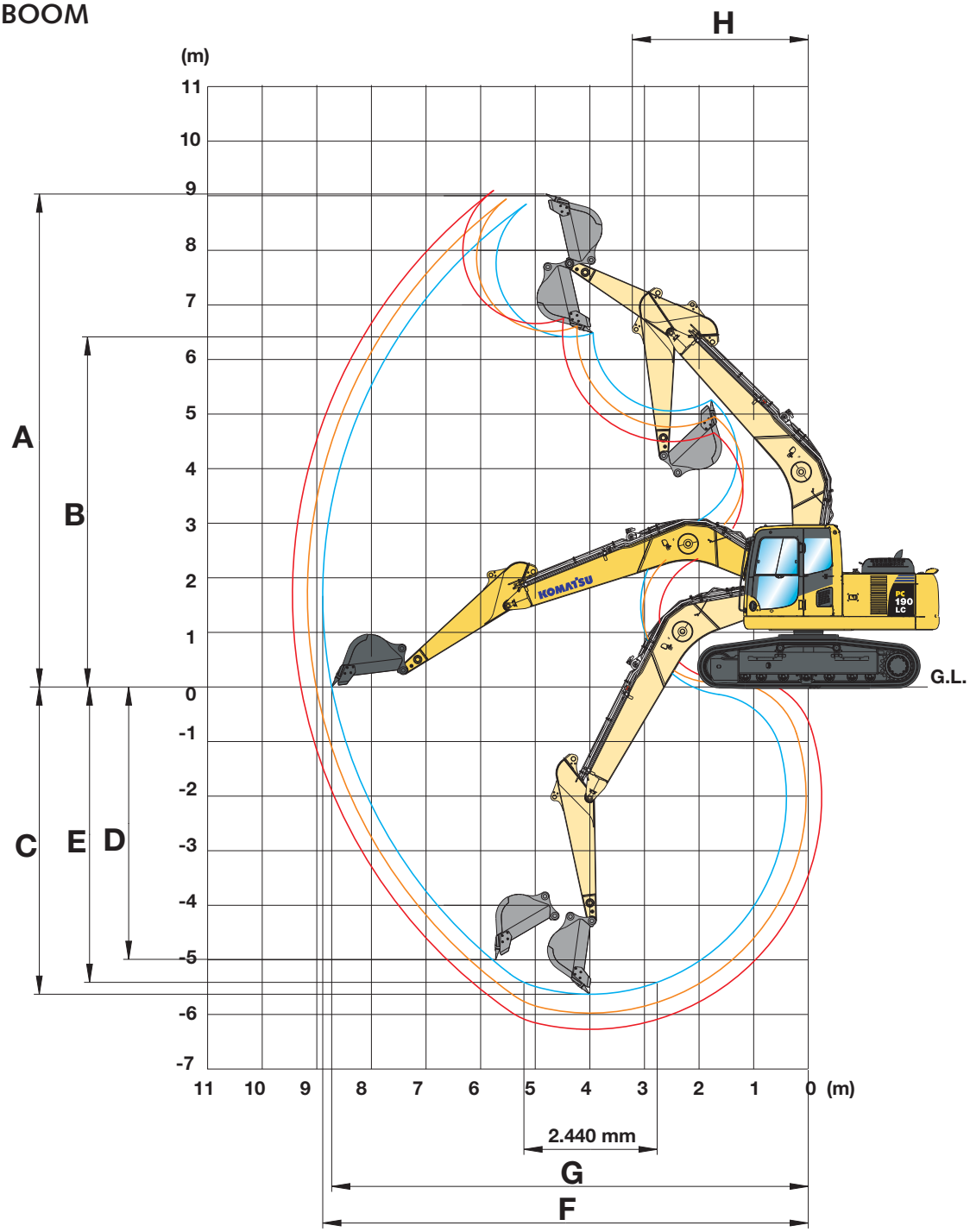

ARM LENGTH		2.250 mm	2.600 mm	2.900 mm
A	Max. digging height	9.030 mm	9.105 mm	9.255 mm
B	Max. dumping height	6.415 mm	6.505 mm	6.655 mm
C	Max. digging depth	5.630 mm	5.985 mm	6.275 mm
D	Max. vertical wall digging depth	4.990 mm	5.180 mm	5.475 mm
E	Max. digging depth of cut for 2,44 m level	5.410 mm	5.780 mm	6.090 mm
F	Max. digging reach	8.890 mm	9.180 mm	9.445 mm
G	Max. digging reach at ground level	8.730 mm	9.020 mm	9.295 mm
H	Min. swing radius	3.220 mm	3.170 mm	3.175 mm

TWO-PIECE BOOM

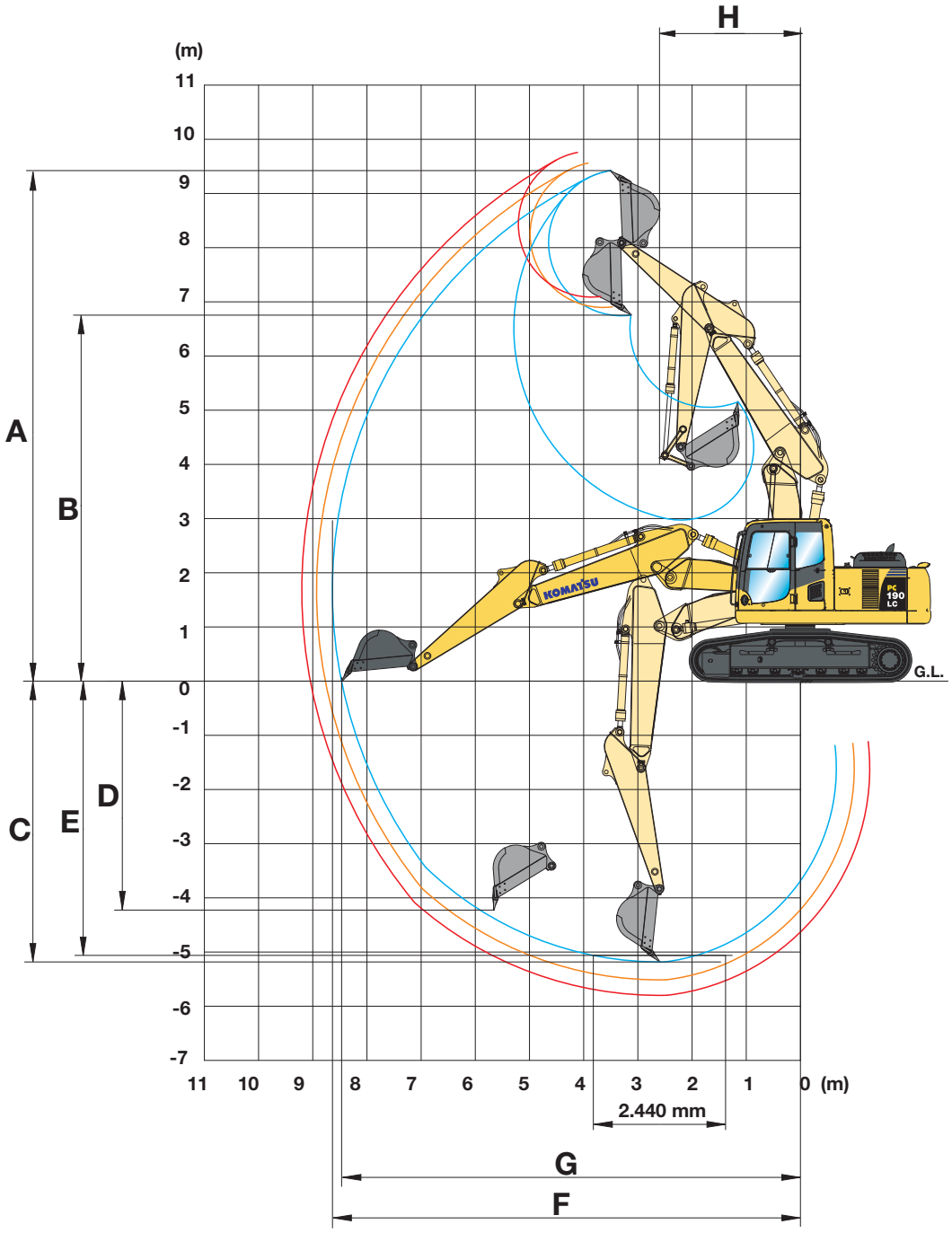

ARM LENGTH		2.250 mm	2.600 mm	2.900 mm
A	Max. digging height	9.420 mm	9.575 mm	9.760 mm
B	Max. dumping height	6.755 mm	6.910 mm	7.100 mm
C	Max. digging depth	5.185 mm	5.515 mm	5.800 mm
D	Max. vertical wall digging depth	4.225 mm	4.530 mm	4.845 mm
E	Max. digging depth of cut for 2,44 m level	5.060 mm	5.400 mm	5.690 mm
F	Max. digging reach	8.635 mm	8.930 mm	9.200 mm
G	Max. digging reach at ground level	8.465 mm	8.765 mm	9.040 mm
H	Min. swing radius	2.600 mm	2.600 mm	2.600 mm

Lifting Capacity

PC190LC-8 MONO BOOM

Arm length	A / B		7,5 m		6,0 m		4,5 m		3,0 m		1,5 m	
2,25 m; 495 kg 0,65 m³; Boom: 5.350 mm	6,0 m	kg	*2.500	*2.500			*4.200	3.600				
	4,5 m	kg	*2.450	2.400			5.250	3.500	*6.200	5.700		
	3,0 m	kg	*2.500	2.100	3.550	2.300	5.150	3.350	*7.650	5.250		
	1,5 m	kg	*2.700	2.000	3.450	2.200	4.650	3.150	7.800	4.850		
	0,0 m	kg	*3.050	2.050	3.400	2.150	4.800	3.050	7.400	4.450	*4.850	*4.850
	-1,5 m	kg	3.600	2.300			4.650	2.950	6.450	4.500	*8.750	8.450	*5.050	*5.050
	-3,0 m	kg	4.400	2.800			4.750	3.000	7.500	4.600	*12.700	8.900	*9.150	*9.150
	-4,5 m	kg										

2,6 m; 495 kg 0,65 m³; Boom: 5.350 mm	6,0 m	kg	*2.100	*2.100			*3.900	3.650						
	4,5 m	kg	*2.050	*2.050			*4.850	3.550						
	3,0 m	kg	*2.100	2.050	*2.750	2.400	5.200	3.400	*7.300	5.400	*11.200	10.400		
	1,5 m	kg	*2.300	1.950	3.600	2.350	4.700	3.250	7.950	4.950				
	0,0 m	kg	*2.600	1.950	3.500	2.250	4.850	3.100	7.500	4.550	*5.700	*5.700		
	-1,5 m	kg	*3.150	2.150	3.400	2.200	4.700	3.000	6.500	4.550	*8.600	*8.350	*5.000	*5.000
	-3,0 m	kg	*4.050	2.600	3.400	2.150	4.750	3.000	7.550	4.600	*13.200	8.950	*8.350	*8.350
	-4,5 m	kg							7.150	4.750	*10.300	9.250		

2,9 m; 495 kg 0,65 m³; Boom: 5.350 mm	6,0 m	kg	*1.800	*1.800			*3.600	3.600						
	4,5 m	kg	*1.800	*1.800	*3.050	2.400	*4.350	3.600						
	3,0 m	kg	*1.850	*1.850	3.550	2.300	5.200	3.400	*6.850	5.400	*10.150	*10.150		
	1,5 m	kg	*2.000	1.800	3.450	2.250	4.650	3.200	7.900	4.950	*6.600	*6.600		
	0,0 m	kg	*2.250	1.800	3.400	2.150	4.800	3.050	7.450	4.500	*6.000	*6.000		
	-1,5 m	kg	*2.700	1.950	3.350	2.100	4.630	2.900	6.450	4.450	*8.300	*8.050	*4.650	*4.650
	-3,0 m	kg	*3.600	2.350			4.700	2.950	7.450	4.500	*12.200	8.800	*7.600	*7.600
	-4,5 m	kg												

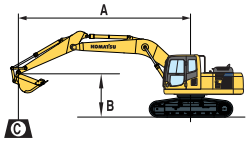

A – Reach from swing center

B – Bucket hook height

C – Lifting capacities, including bucket (495 kg), bucket linkage and bucket cylinder

– Rating over front

– Rating over side

– Rating at maximum reach

When removing bucket, linkage or cylinder, lifting capacities can be increased by their respective weights.

With 600 mm shoes

PC190LC-8 TWO-PIECE BOOM

Arm length	A / B		7,5 m		6,0 m		4,5 m		3,0 m		1,5 m	
2,25 m; 495 kg 0,65 m³; Boom: 5.069 mm	7,5 m	kg	*3.050	*3.050					*3.550	*3.350		
	6,0 m	kg	*2.650	*2.650			*2.900	*2.900	*5.100	*5.100		
	4,5 m	kg	*2.550	*2.550			5.150	3.550	*6.350	5.800		
	3,0 m	kg	*2.650	2.400			5.000	3.400	8.050	5.350	*14.050	10.300
	1,5 m	kg	*2.850	2.250			4.800	3.100	7.550	4.900		
	0,0 m	kg	*3.300	2.300			4.650	3.050	7.250	4.650	*7.100	*7.100
	-1,5 m	kg	3.850	2.550			4.550	3.000	7.150	4.600	*11.000	8.850
	-3,0 m	kg							*5.650	4.650		

2,6 m; 495 kg 0,65 m³; Boom: 5.069 mm	7,5 m	kg	*2.500	*2.500					*3.550	*3.550				
	6,0 m	kg	*2.200	*2.200			*3.300	*3.300						
	4,5 m	kg	*2.150	*2.150			*4.600	3.600	*5.300	*5.300				
	3,0 m	kg	*2.200	*2.200	*2.850	2.300	5.050	3.400	8.150	5.450	*13.200	10.250		
	1,5 m	kg	*2.400	2.100	3.350	2.200	4.800	3.100	7.650	5.000	*8.300	*8.300		
	0,0 m	kg	*2.750	2.150	3.200	2.150	4.600	3.050	7.250	4.650	*7.800	*7.800		
	-1,5 m	kg	*3.450	2.350			4.550	2.950	7.150	4.550	*10.900	8.750		
	-3,0 m	kg	*3.950	2.950			*4.200	3.050	*6.450	4.600	*8.250	*8.250		

2,9 m; 495 kg 0,65 m³; Boom: 5.069 mm	7,5 m	kg	*2.150	*2.150										
	6,0 m	kg	*1.900	*1.900			*3.300	*3.300						
	4,5 m	kg	*1.850	*1.850	*1.850	*1.850	*4.250	3.650	*4.550	*4.550				
	3,0 m	kg	*1.900	*1.900	*3.250	2.300	5.005	3.450	*7.650	5.550	*12.450	10.500		
	1,5 m	kg	*2.050	1.950	3.350	2.150	4.800	3.100	7.650	5.000	*10.500	9.400		
	0,0 m	kg	*2.350	2.000	3.250	2.150	4.600	3.000	7.250	4.650	*8.050	*8.050		
	-1,5 m	kg	*2.900	2.150			4.500	2.900	7.100	4.500	*10.400	8.650		
	-3,0 m	kg	*3.950	2.650			4.500	2.950	6.950	4.500	*9.200	8.800		

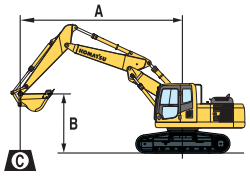

A – Reach from swing center

B – Bucket hook height

C – Lifting capacities, including bucket (495 kg), bucket linkage and bucket cylinder

– Rating over front

– Rating over side

– Rating at maximum reach

When removing bucket, linkage or cylinder, lifting capacities can be increased by their respective weights.

With 600 mm shoes

* Load is limited by hydraulic capacity rather than tipping. Ratings are based on SAE Standard No. J1097.
Rated loads do not exceed 87% of hydraulic lift capacity or 75% of tipping load.

PC190NLC-8 MONO BOOM

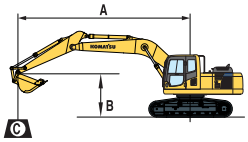

A – Reach from swing center

B – Bucket hook height

C – Lifting capacities, including bucket (495 kg), bucket linkage and bucket cylinder

– Rating over front

– Rating over side

– Rating at maximum reach

When removing bucket, linkage or cylinder, lifting capacities can be increased by their respective weights.

With 500 mm shoes

Arm length	A / B		7,5 m		6,0 m		4,5 m		3,0 m		1,5 m	
2,25 m; 495 kg 0,65 m³; Boom: 5.350 mm	6,0 m	kg	*2.500	*2.500			*4.200	3.250				
	4,5 m	kg	*2.450	2.150			5.150	3.200	*6.200	5.150		
	3,0 m	kg	*2.500	1.900	3.450	2.050	5.050	3.000	*7.700	4.750		
	1,5 m	kg	*2.700	1.800	3.400	2.000	4.550	2.850	7.650	4.350		
	0,0 m	kg	*3.050	1.850	3.350	1.950	4.700	2.700	7.250	3.940	*4.850	*4.850
	-1,5 m	kg	3.500	2.050			4.580	2.600	6.350	4.000	*8.750	7.400	*5.050	*5.050
	-3,0 m	kg	4.350	2.500			4.700	2.700	7.400	4.100	*12.750	7.850	*9.150	*9.150
	-4,5 m	kg												
2,6 m; 495 kg 0,65 m³; Boom: 5.350 mm	6,0 m	kg	*2.100	*2.100			*3.900	3.300				
	4,5 m	kg	*2.050	2.050			*4.850	3.250				
	3,0 m	kg	*2.100	1.800	*2.750	2.150	5.100	3.100	*7.300	4.850	*11.200	9.200	
	1,5 m	kg	*2.300	1.700	3.500	2.100	4.600	2.900	7.800	4.450			
	0,0 m	kg	*2.600	1.750	3.400	2.000	4.750	2.750	7.300	4.050	*5.700	*5.700	
	-1,5 m	kg	*3.150	1.900	3.350	1.950	4.600	2.650	6.350	4.050	*8.600	7.450	*5.000	*5.000
	-3,0 m	kg	3.950	2.300	3.300	1.900	4.650	2.700	7.400	4.100	*13.200	7.850	*8.350	*8.350
	-4,5 m	kg												
2,9 m; 495 kg 0,65 m³; Boom: 5.350 mm	6,0 m	kg	*1.800	*1.800			*3.600	3.350				
	4,5 m	kg	*1.800	*1.800	*3.050	2.150	*4.350	3.250				
	3,0 m	kg	*1.850	1.650	3.500	2.050	5.100	3.050	*6.850	4.900	*10.150	9.400	
	1,5 m	kg	*2.000	1.600	3.400	2.000	4.550	2.850	7.700	4.400	*6.600	*6.600	
	0,0 m	kg	*2.250	1.600	3.300	1.900	4.700	2.700	7.300	4.000	*6.000	*6.000	
	-1,5 m	kg	*2.700	1.750	3.250	1.850	4.550	2.600	6.300	3.950	*8.300	7.350	*4.650	*4.650
	-3,0 m	kg	*3.600	2.100			4.600	2.600	7.300	4.000	*12.200	7.700	*7.600	*7.600
	-4,5 m	kg												

PC190NLC-8 TWO-PIECE BOOM

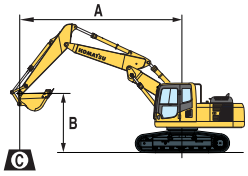

A – Reach from swing center

B – Bucket hook height

C – Lifting capacities, including bucket (495 kg), bucket linkage and bucket cylinder

– Rating over front

– Rating over side

– Rating at maximum reach

When removing bucket, linkage or cylinder, lifting capacities can be increased by their respective weights.

With 500 mm shoes

Arm length	A / B		7,5 m		6,0 m		4,5 m		3,0 m		1,5 m	
2,25 m; 495 kg 0,65 m³; Boom: 5.069 mm	7,5 m	kg	*3.050	*3.050			*3.350	*3.350				
	6,0 m	kg	*2.650	*2.650			*2.900	*2.900	*5.100	*5.100		
	4,5 m	kg	*2.550	2.350			5.000	3.050	*6.350	5.000		
	3,0 m	kg	*2.650	2.000			4.800	2.900	7.750	4.600	*14.050	8.650
	1,5 m	kg	*2.850	1.900			4.600	2.600	7.250	4.150		
	0,0 m	kg	*3.300	1.900			4.400	2.550	6.950	3.900	*7.100	*7.100
	-1,5 m	kg	3.700	2.150			4.350	2.500	6.850	3.800	*11.000	7.250
	-3,0 m	kg							*5.650	3.900		
2,6 m; 495 kg 0,65 m³; Boom: 5.069 mm	7,5 m	kg	*2.500	*2.500					*3.550	*3.550		
	6,0 m	kg	*2.200	*2.200			*3.300	3.250				
	4,5 m	kg	*2.150	*2.150			*4.600	3.200	*5.300	5.250		
	3,0 m	kg	*2.200	1.950	*2.850	2.000	4.850	3.000	7.850	4.800	*13.200	9.250
	1,5 m	kg	*2.400	1.800	3.200	1.900	4.600	2.700	7.300	4.350	*8.300	7.950
	0,0 m	kg	*2.750	1.850	3.150	1.850	4.400	2.650	6.950	4.050	*7.800	7.500
	-1,5 m	kg	3.400	2.050			4.350	2.550	6.850	3.900	*10.900	7.450
	-3,0 m	kg	*3.950	2.550			*4.200	2.600	*6.450	3.950	*8.250	7.600
2,9 m; 495 kg 0,65 m³; Boom: 5.069 mm	7,5 m	kg	*2.150	*2.150								
	6,0 m	kg	*1.900	*1.900			*3.300	3.300				
	4,5 m	kg	*1.850	*1.850	*1.850	*1.850	*4.250	3.200	*4.550	*4.550		
	3,0 m	kg	*1.900	1.800	*3.250	2.000	4.850	3.000	*7.650	4.850	*12.450	9.500
	1,5 m	kg	*2.050	1.700	3.200	1.850	4.600	2.700	7.350	4.350	*10.500	8.100
	0,0 m	kg	*2.350	1.700	3.100	1.800	4.400	2.600	6.950	4.000	*8.050	7.450
	-1,5 m	kg	*2.900	1.850			4.300	2.500	6.800	3.850	*10.400	7.350
	-3,0 m	kg	3.850	2.300			4.300	2.550	6.800	3.900	*9.200	7.500

* Load is limited by hydraulic capacity rather than tipping. Ratings are based on SAE Standard No. J1097.
Rated loads do not exceed 87% of hydraulic lift capacity or 75% of tipping load.

Hydraulic Excavator

PC190LC/NLC-8

Standard and Optional Equipment

ENGINE

Komatsu SAA4D107E-1 turbocharged common rail direct injection diesel engine EU Stage IIIA/EPA Tier III compliant	●
Suction type cooling fan with radiator fly screen	●
Automatic engine warm-up system	●
Engine overheat prevention system	●
Fuel control dial	●
Auto-deceleration function	●
Engine key stop	●
Engine ignition can be password secured on request	●
Alternator 24 V/60 A	●
Starter motor 24 V/4,5 kW	●
Batteries 2 × 12 V/120 Ah	●
Diesel particulate filter	○

HYDRAULIC SYSTEM

Electronic closed-centre load sensing (E-CLSS) hydraulic system (HydrauMind)	●
Pump and engine mutual control (PEMC) system	●
One additional hydraulic circuit	●
5-working mode selection system; Power mode, economy mode, breaker mode, attachment mode and lifting mode	●
PowerMax function	●
Adjustable PPC wrist control levers for arm, boom, bucket and swing, with sliding proportional control for attachments and 3 auxiliary buttons	●
Prepared for hydraulic quick-coupler	●
Additional hydraulic functions	○

UNDERCARRIAGE

Track roller guards	●
Track frame under-guards	●
LC and NLC undercarriages	○
500, 600, 700, 800 mm triple grouser track-shoes	○

CABIN

Reinforced safety SpaceCab™; Highly pressurised and tightly sealed hyper viscous mounted cab with tinted safety glass windows, large roof window with sun shade, pull-up type front window with locking device, removable lower window, front window wiper with intermittent feature, sun roller blind, cigarette lighter, ashtray, luggage shelf, floor mat	●
Heated, high back air suspension seat with lumbar support, height adjustable arm rests and retractable seat belt	●
Automatic climate control system	●
12 Volt power supply	●
Beverage holder and magazine rack	●
Hot and cool box	●
Radio	●
Lower wiper	○
Rain visor (not with OPG)	○

SERVICE AND MAINTENANCE

Automatic fuel line de-aeration	●
Double element type air cleaner with dust indicator and auto dust evacuator	●
KOMTRAX™ - Komatsu satellite monitoring system	●
Multi-function video compatible colour monitor with Equipment Management and Monitoring System (EMMS) and efficiency guidance	●
Toolkit and spare parts for first service	●
Automatic greasing system	○
Service points	○

WORK EQUIPMENT

Mono boom	○
Two-piece boom	○
2,25 m; 2,6 m; 2,9 m arms	○
Komatsu buckets	○

SAFETY EQUIPMENT

Rear view camera system	●
Electric horn	●
Overload warning device	●
Lockable fuel cap and covers	●
Audible travel alarm	●
Boom safety valves	●
Large handrails, rear-view mirrors	●
Battery main switch	●
Arm safety valve	●
OPG Level II front guard (FOPS)	○
OPG Level II top guard (FOPS)	○

DRIVES AND BRAKES

Hydrostatic, 2-speed travel system with automatic shift and planetary gear type final drives, and hydraulic lock service brakes	●
PPC control levers and pedals for steering and travel	●

LIGHTING SYSTEM

Working lights: 2 revolving frame, 1 boom	●
Additional working lights: 4 cab roof (front), 1 cab roof (rear), 1 boom (r.h.), 1 counterweight (rear), beacon	○

OTHER EQUIPMENT

Standard counterweight	●
Electric refuelling pump with automatic shut off function	●
Standard colour scheme and decals	●
Parts book and operator manual	●
Biodegradable oil for hydraulic system	○
Customised paint	○

Further equipment on request

● standard equipment
○ optional equipment

Your Komatsu partner:

Komatsu Europe International NV
Mechelsesteenweg 586
B-1800 VILVOORDE (BELGIUM)
Tel. +32-2-255 24 11
Fax +32-2-252 19 81
www.komatsu.eu

UESS14101 08/2012

Materials and specifications are subject to change without notice.
KOMATSU is a trademark of Komatsu Ltd. Japan.

Printed in Europe – This specification sheet may contain attachments and optional equipment that are not available in your area.
Please consult your local Komatsu distributor for those items you may require. Materials and specifications are subject to change without notice.