Volvo Construction Equipment

ECR88D

Volvo Excavators 8.6-9.5 t 58 hp

A passion for performance

At Volvo Construction Equipment, we're not just coming along for the ride. Developing products and services that raise productivity – we are confident we can lower costs and increase profits for industry experts. Part of the Volvo Group, we are passionate about innovative solutions to help you work smarter – not harder.

Helping you to do more

Doing more with less is a trademark of Volvo Construction Equipment. High productivity has long been married to low energy consumption, ease of use and durability. When it comes to lowering life-cycle costs, Volvo is in a class of its own.

Designed to fit your needs

There is a lot riding on creating solutions that are suited to the particular needs of different industry applications. Innovation often involves high technology – but it doesn't always have to. Some of our best ideas have been simple, based on a clear and deep understanding of our customers' working lives.

You learn a lot in 180 years

Over the years, Volvo has advanced solutions that have revolutionized the use of construction equipment. No other name speaks Safety louder than Volvo. Protecting operators, those around them and minimizing our environmental impact are traditional values that continue to shape our product design philosophy.

We're on your side

We back the Volvo brand with the best people. Volvo is truly a global enterprise, one that is on standby to support customers quickly and efficiently – wherever they are.

We have a passion for performance.

Volvo Trucks

Renault Trucks

Mack Trucks

UD Trucks

Volvo Buses

Volvo Construction Equipment

Volvo Penta

Volvo Financial Services

Powered to perform

Volvo proudly introduces the new ECR88D compact short swing radius excavator. Featuring a powerful Volvo engine and perfectly matched hydraulic system, this machine delivers high performance, excellent control and low fuel consumption. Sustain optimum power and productivity with Volvo.

Volvo engine ECR 88d

Volvo's premium Tier 4f / Stage IIIB engine delivers superior performance and low fuel consumption. The engine features an Exhaust After Treatment System (EATS) to lower emissions and a regeneration process that does not interrupt operation, performance or productivity.

Slew and boom offset

Slew and boom offset movements are controlled simultaneously for easy and fast positioning of the machine. Joystick control enables precise, smooth and effortless command of the slew and boom offset.

Tractive force

High system pressure delivers impressive tractive force when climbing gradients or traveling over rough terrain. For improved performance, the ECR88D boasts a 16% improvement in tractive force compared to the previous model.

ENHANCED HYDRAULICS

Volvo's state-of-the-art hydraulic system is perfectly matched to the Volvo engine and components – delivering high performance and improved fuel efficiency. The hydraulic system has been designed for fast response and smooth operation.

STABILITY

Design improvements including a counterweight have shifted the center of gravity towards the rear of the machine. Together with a strong undercarriage, this delivers superior stability while lifting bigger loads.

Stability you can count on

Whether you're working in the road construction, utilities, landscaping or any other application, the ECR88D will give you access to more jobsites, where you can work closer to obstacles, safely. With a heavy counterweight and strong undercarriage, this machine delivers superior stability. And with easy service access you'll enjoy maintenance made easy with Volvo.

Service access

For safe and easy access, all service check points are located under the wide-opening engine hood and are accessed from ground level. Grouped filters ensure regular maintenance is straightforward and uptime is maximized.

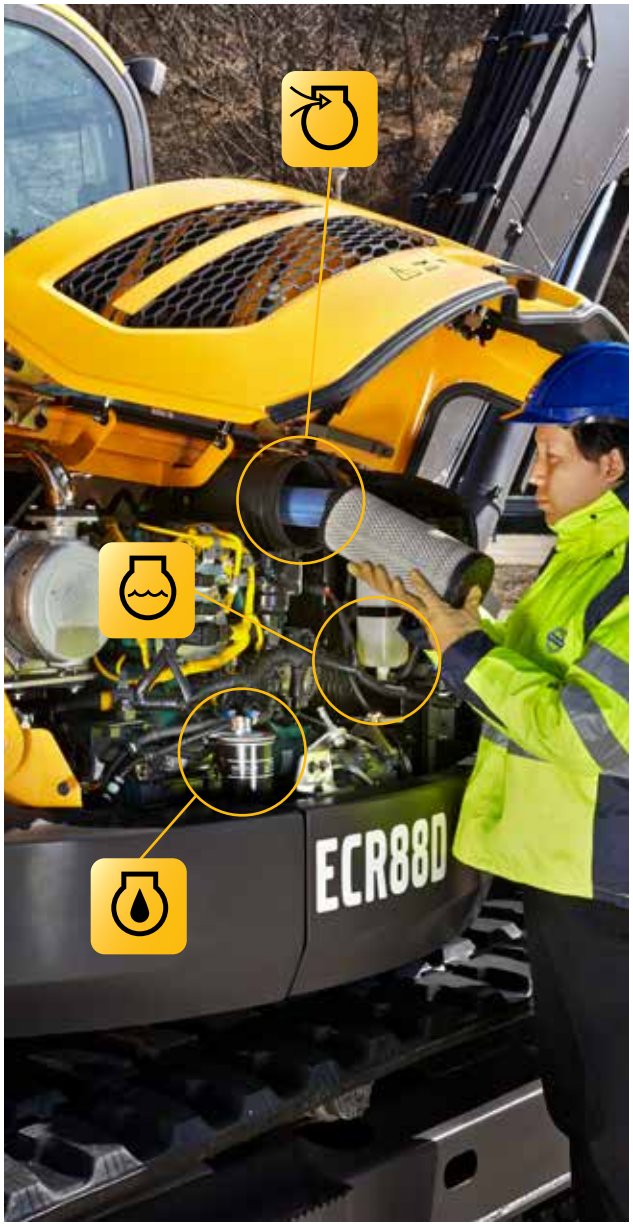

Single pivot pin

Volvo uses a single pivot design that achieves maximum support between main frame and front equipment, This concept increases, stability, durability and lifetime of the components.

MATRIS and VCADS Pro

For increased uptime, Volvo's high-tech, computer-based MATRIS tool allows you to monitor machine usage and analyze machine operation. VCADS Pro analysis and programming software provides fast diagnostics.

Visibly better

At Volvo we know that when operators are comfortable they experience less fatigue and work more productively. That's why the premium, Volvo designed cab provides superior visibility, a safe and spacious working environment and easy to access controls. Step inside and see the results for yourself.

Climate control

Control your climate with Volvo's powerful, industry-leading climate control system. With seven well-spaced vents quickly heating or cooling the cab, this air circulation and defrosting system increases comfort and productivity.

Keypad

The majority of switches are integrated in one centralized keypad on the right-hand console. The operator can easily control the I-ECU monitor and audio system for increased comfort.

Proportional joysticks

Via the joystick controls, the operator can easily adjust the direction and amount of hydraulic flow sent to the attachment. Benefit from the correct speed and power for optimal attachment operation.

Storage

The Volvo cab features ample storage locations for personal belongings including an additional glove-box, side pocket, phone storage, cup holder and a pocket behind the seat.

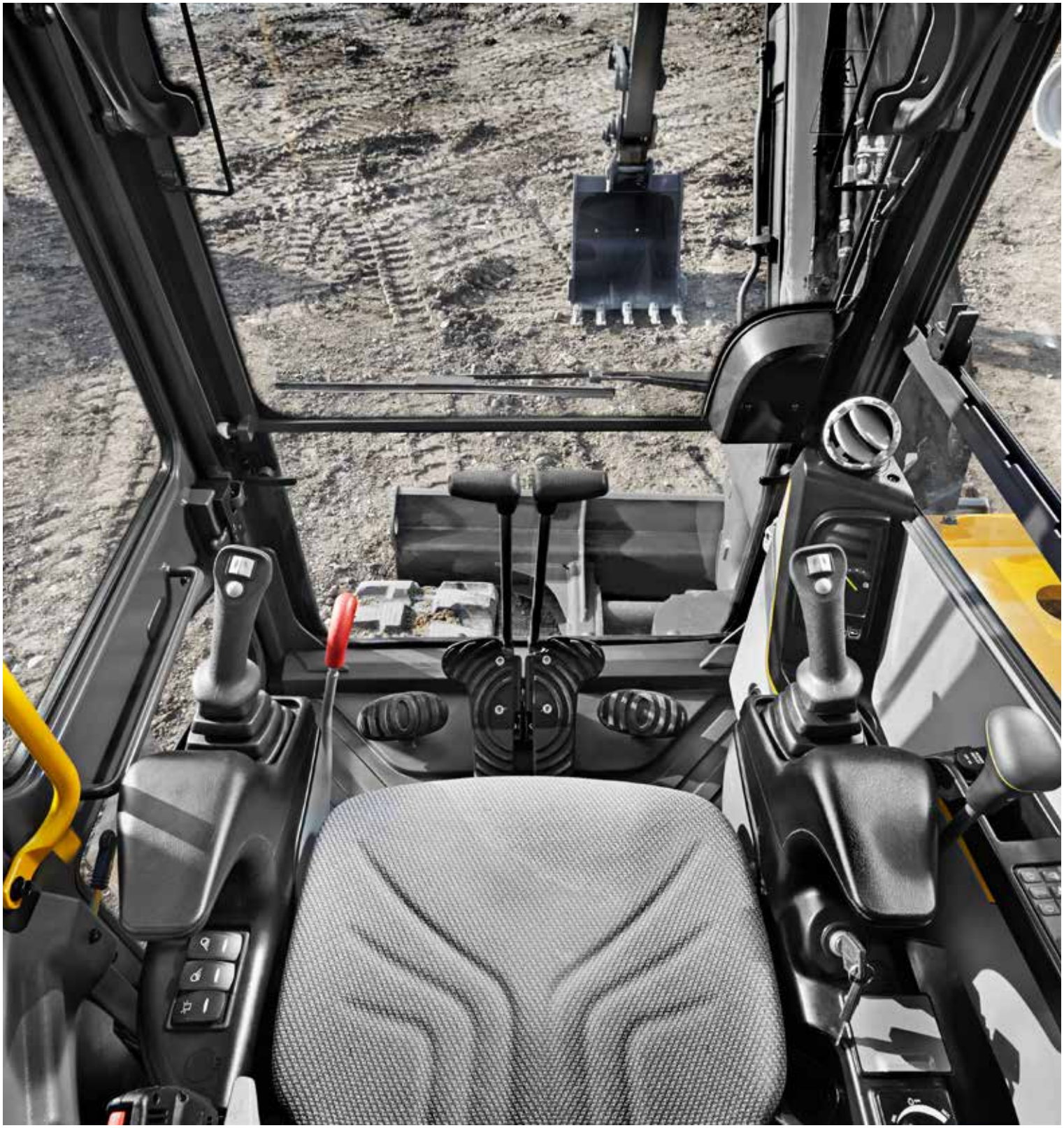

VOLVO CAB

All-around visibility from slim cab pillars and large expanses of glass is at the center of Volvo's cab design. The ROPS certified cab features vibration and noise isolation, ergonomic controls and an adjustable seat for increased comfort, reduced fatigue and increased productivity.

HYDRAULIC BREAKERS

Volvo's durable hydraulic breakers have been designed for ultimate compatibility with Volvo excavators. The range has been built to break the most demanding materials and combines excellent performance with low noise and vibration levels.

Infinite opportunities

Get the most out of your compact short swing radius excavator and access more segments and applications with Volvo's comprehensive range of attachments – designed to work in perfect harmony with Volvo machines. Increase your versatility, effectively perform a variety of tasks and experience new levels of productivity with the right attachment for your specific requirements.

Interfaces

Direct fit

For maximum productivity when only operating in one application, Volvo's direct fit attachments provide the best performance and shortest tip radius.

Volvo mechanical quick coupler

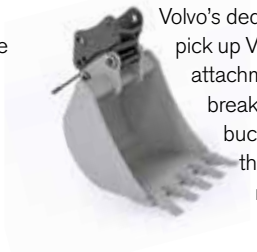

Volvo's dedicated quick couplers pick up Volvo hydraulic attachments including breakers, thumbs and buckets for use in both the face shovel and normal backhoe position.

Volvo hydraulic quick coupler

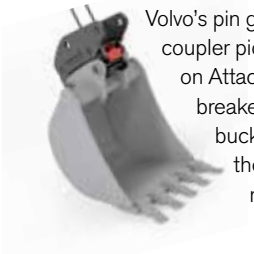

Volvo's pin grabber quick coupler picks up Volvo pin-on Attachments, including breakers, thumbs and buckets for use in both the face shovel and normal position.

Buckets

General purpose buckets

The perfect tool for trenching and handling in a variety of soil conditions. Available in different widths.

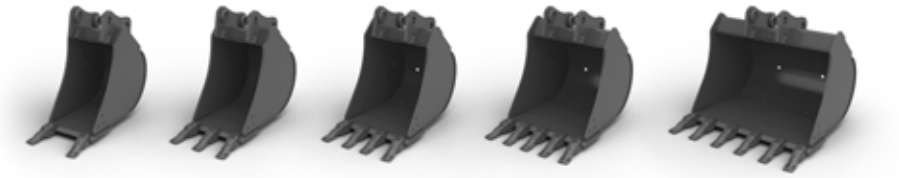

Fixed ditching buckets

Ideal for ditch cleaning, grading, landscaping and backfilling.

Tiltable ditching bucket

This bucket can be tilted 45o to each side making it a flexible and versatile solution for grading, landscaping, ditch cleaning and backfilling.

Volvo hydraulic thumb

Designed to work with both Volvo direct fit buckets and with quick coupler in various materials. Used for piling, placing, loading, lifting and carrying.

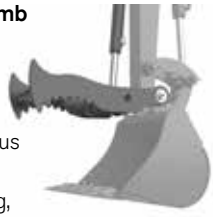

Volvo Tooth System and wear parts

General purpose

Self-sharpening, general purpose tooth with good penetration and long service life.

Twin pick

Twin pick point with sharp, dual point profile. Ideal for compact or frozen ground.

Pick point

Intended for use in extremely compact materials.

Spade nose

Designed for finishing work such as leveling, grading, cleaning and backfilling.

Bottom leg adapter

A long (one and a half) bottom leg adapter for welding to both sides of the cutting edge.

Side cutter

Side cutters ensure longer bucket life by protecting the side plates and corner welds.

Built to get the job done

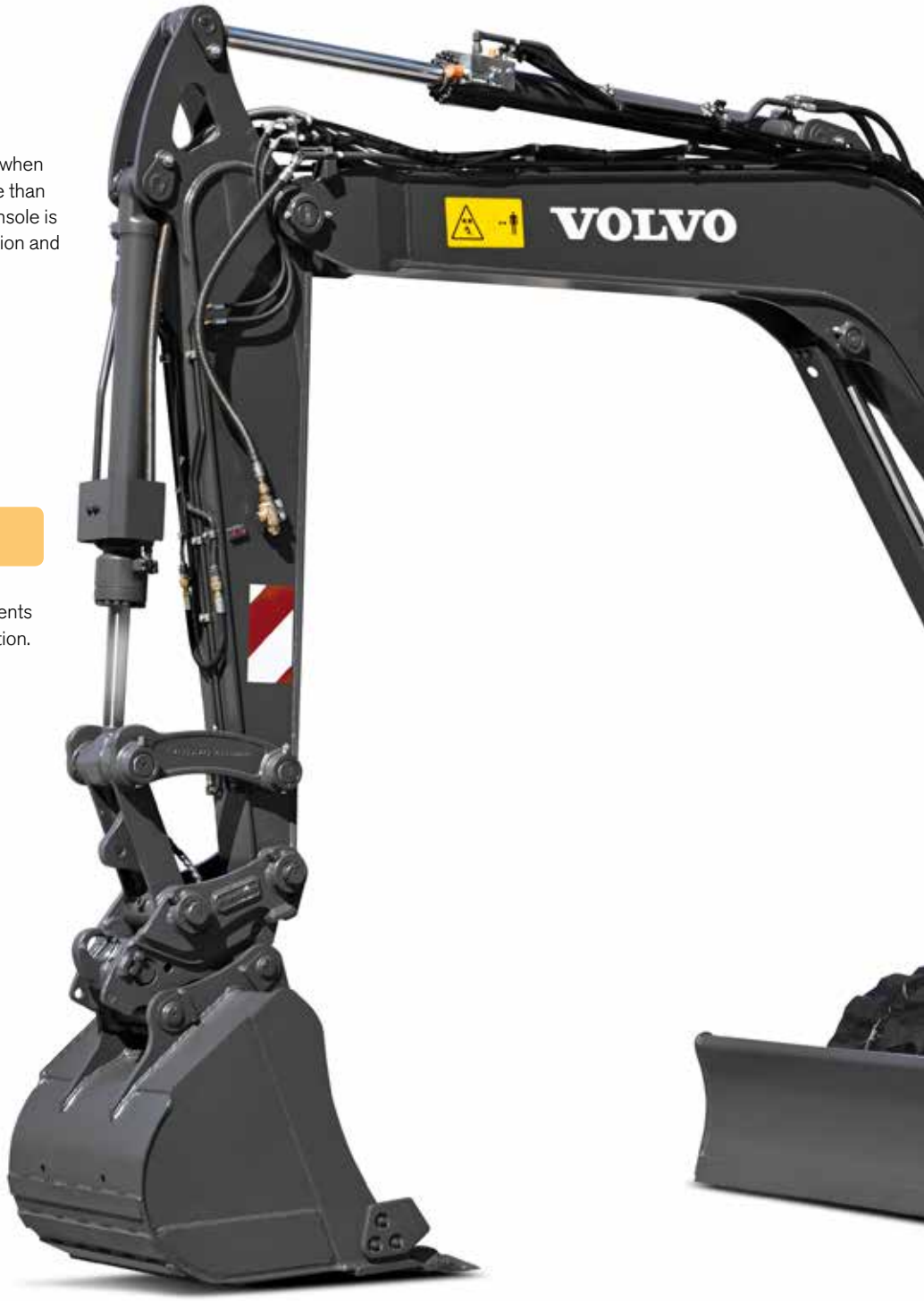

Auto idle

Engine speed is reduced to idle when the controls are inactive for more than five seconds or the left-hand console is raised – reducing fuel consumption and noise.

ENHANCED HYDRAULICS

The hydraulic system is perfectly matched to the engine and components for fast response and smooth operation.

Optional hydraulics

For increased versatility, auxiliary hydraulic systems are available to enable the operation of a wide range of attachments.

MATRIS and VCADS Pro

The MATRIS tool monitors machine usage and operation. VCADS Pro analysis and programming software provides fast diagnostics.

Optional dozer floating

The optional dozer blade float function 'floats' the dozer blade over the ground for improved leveling control and fuel efficiency.

VOLVO CAB

Volvo's purpose designed cab offers excellent all-round viability, enhanced by the slim cab pillars and large windows.

VOLVO ENGINE ECR 88D

Premium Tier 4f/Stage IIIB Volvo Engine delivers superior performance with low fuel consumption.

SERVICE ACCESS

All service check points are accessed from ground level. Grouped filters make regular maintenance easy.

STABILITY

A heavy counterweight and a strong undercarriage deliver superior stability and the ability to lift bigger loads.

Single pivot pin

Volvo uses a single pivot design that achieves maximum support between main frame and front equipment, This concept increases, stability, durability and lifetime of the components

Undercarriage

Durable and strong X-shape undercarriage ensures superior stability and increases Single pivot pin machine lifetime.

Adding value to your business

Being a Volvo customer means having a complete set of services at your fingertips. Volvo can offer you a long-term partnership, protect your revenue and provide a full range of customer solutions using high quality parts, delivered by passionate people. Volvo is committed to increasing the positive return on your investment and maximising uptime.

Complete Solutions

Volvo has the right solution for you. So why not let us provide all your needs throughout the whole life cycle of your machine? By listening to your requirements, we can reduce your total cost of ownership and increase your revenue.

Genuine Volvo Parts

Our attention to detail is what makes us stand out. This proven concept acts as a solid investment in your machine's future. Parts are extensively tested and approved because every part is vital for uptime and performance. Only by using Genuine Volvo Parts, can you be sure that your machine retains the renowned Volvo quality.

Service Network

In order to respond to your needs faster, a Volvo expert is on their way to your job site from one of our Volvo facilities. With our extensive infrastructure of technicians, workshops and dealers, Volvo has a comprehensive network to fully support you using local knowledge and global experience.

CUSTOMER SUPPORT AGREEMENTS

The range of Customer Support Agreements offer preventive maintenance, total repairs and a number of uptime services. Volvo uses the latest technology to monitor machine operation and status, giving you advice to increase your profitability. By having a Customer Support Agreement you are in control of your service costs.

Volvo ECR88D in detail

Engine		
The new Tier 4f/Stage IIIB compliant diesel engine is equipped with in-line, turbocharged and water cooled.		
Model	Volvo	D2.6H
Max. power at	r/min	2 000
Net (ISO 9249/SAEJ1349)	kW	41
	hp	56
Gross (SAE J1995)	kW	43
	hp	58
Max. torque	Nm	220
at engine speed	r/min	1 300
No. of cylinders		4
Displacement	l	2.62
Bore	mm	87
Stroke	mm	110
Electrical system		
Voltage	V	12
Batteries	V	1 x 12
Battery capacity	Ah	100
Alternator	V/Ah	12/70
Starter motor output	V - kW	12 - 2.5
Hydraulic system		
Closed-Center Load-Sensing (CCLS) system with load independent functions.		
Main pump: Variable-displacement pump		
Maximum flow	l/min	1 x 169
Pilot pump: Gear pump		
Maximum flow	l/min	1 x 14
Relief valve setting pressure		
Implement	MPa	29.4
Travel circuit	MPa	29.4
Swing circuit	MPa	24.5
Pilot circuit	MPa	3.4
Swing system		
Direct drive swing with radial piston motor-maintenance free and automatic holding brake anti-rebound valve.		
Max. swing speed	r/min	9.3
Max. swing torque	kNm	22.9

Undercarriage		
Robust X-shaped frame with sealed and greased track chains.		
Track shoes		2 x 39
Link pitch	mm	154
Shoe width - steel	mm	450 / 600
Shoe width - rubber	mm	450
Bottom rollers		2 x 5
Top rollers		2 x 1
Travel System		
Each track is powered by an automatic two-speed shift travel motor. The track brakes are multi-disc, spring-applied and hydraulic released.		
Travel speed low	km/h	2.6
Travel speed high	km/h	4.9
Max. drawbar pull	kN	65
Gradeability	°	35
Service Refill		
Fuel tank	l	110
Hydraulic system, total	l	140
Hydraulic tank	l	84
Engine oil	l	10
Engine coolant	l	9.3
Travel reduction unit	l	2 x 1.6
Cab		
Refrigerant of the type R134a is used when this machine is equipped with air conditioning. Contains fluorinated greenhouse gas R134a, Global Warming Potential 1.430 t CO2-eq		
Sound Level		
Sound level in cab according to ISO 6396		
LpA	dB(A)	73
External sound level according to ISO 6395 and EU Noise Directive 2000/14/EC		
LwA	dB(A)	97

Buckets

	Width	Weight	Capacity
	mm	kg	l
Direct bucket	300	111	79
	450	139	143
	600	162	200
	750	182	266
	900	205	333
Quick coupler bucket	450	132	143
	600	156	200
	700	171	244
	850	191	310

Specifications

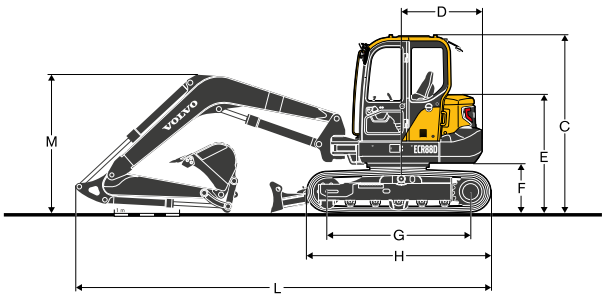

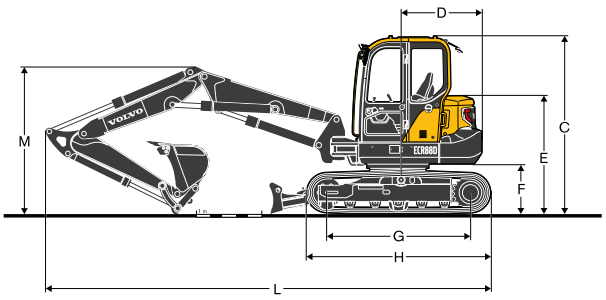

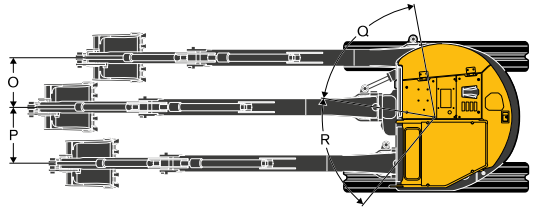

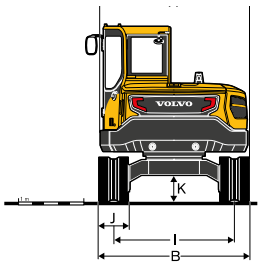

DIMENSIONS

Machine			**ECR88D**			
Boom		**m**	**3.55 (mono)**		**3.85 (2pcs)**	
Arm		**m**	**1.7**	**2.1**	**1.7**	**2.1**
A	Overall width of upper structure	mm	2 210	2 210	2 213	2 213
B	Overall width	mm	2 300	2 300	2 300	2 300
C	Overall height of cab	mm	2 715	2 715	2 715	2 715
D	Tail swing radius	mm	1 290	1 290	1 320	1 320
E	Overall height of engine hood	mm	1 180	1 180	1 180	1 180
F	Counterweight clearance *	mm	760	760	760	760
G	Tumbler length	mm	2 200	2 200	2 200	2 200
H	Track length	mm	2 830	2 830	2 830	2 830
I	Track gauge	mm	1 850	1 850	1 850	1 850
J	Shoe width	mm	450	450	450	450
K	Min. ground clearance *	mm	405	405	405	405
L	Overall length	mm	6 370	6 420	6 810	6 860
M	Overall heght of boom	mm	2 115	2 230	2 247	2 455
O	Boom swing distance	mm	760	760	756	756
P	Boom swing distance	mm	860	860	863	863
Q	Boom swing angle	°	70		70	
R	Boom swing angle	°	60		60	

* Without shoe grouser

Specifications

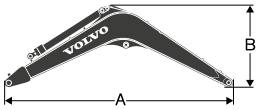

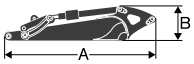

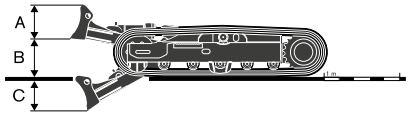

Boom and Arm

			Boom		Arm	
			3.55 m (mono)	**3.85 m (2pcs)**	**1.7 m**	**2.1 m**
A	Length	mm	3 690	4 030	2 283	2 684
B	Heigth	mm	1 244	983	518	562
	Width	mm	335	340	305	305
	Weight	kg	530	774	280	340

Boom: Includes cylinder, piping and pin, excludes boom cyl. Pin.
Arm: Includes cylinder, linkage and pin.

Dozer blade

A	Height	mm	470
	Width	mm	2 300
B	Lifting height	mm	518
C	Digging depth	mm	433

MACHINE WEIGHTS AND GROUND PRESSURE

	Shoe width	Operating weight	Ground pressure
	mm	**kg**	**kPa**
Mono boom 3.55 m, Arm 1.7 m, Bucket 188 kg (266 l), Counterweight 1 480 kg			
Steel track	450	9 010	40.5
	600	9 180	30.9
Rubber track	450	8 810	39.6
Rubber pad	450	9 030	40.4
Mono boom 3.55 m, Arm 2.1 m, Bucket 188 kg (266 l), Counterweight 1 480 kg			
Steel track	450	9 090	40.9
	600	9 260	31.2
Rubber track	450	8 890	40.0
Rubber pad	450	9 110	40.8
2pcs boom 3.85 m, Arm 1.7 m, Bucket 188 kg (266 l), Counterweight 1 690 kg			
Steel track	450	9 380	42.2
	600	9 550	32.2
Rubber track	450	9 180	41.3
Rubber pad	450	9 400	42.1
2pcs boom 3.85 m, Arm 2.1 m, Bucket 188 kg (266 l), Counterweight 1 690 kg			
Steel track	450	9 460	42.5
	600	9 630	32.5
Rubber track	450	9 260	41.6
Rubber pad	450	9 480	42.5

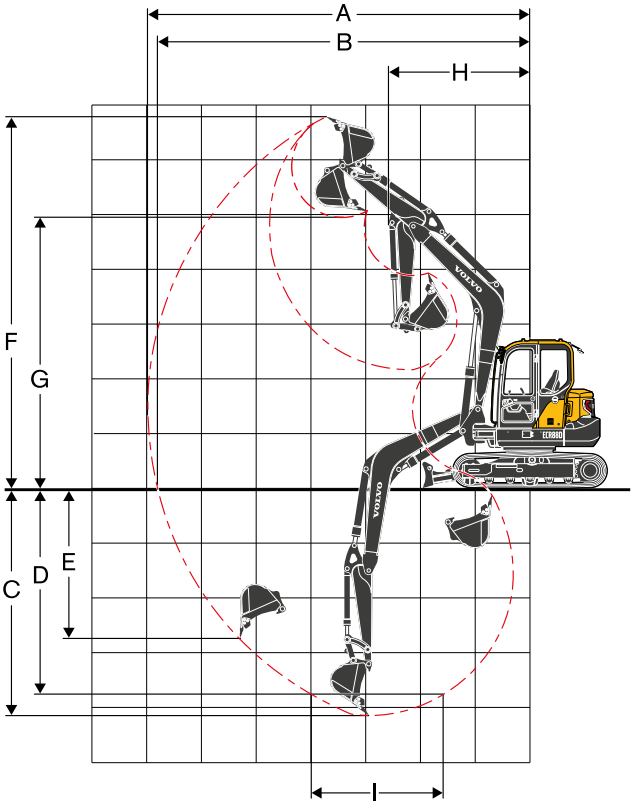

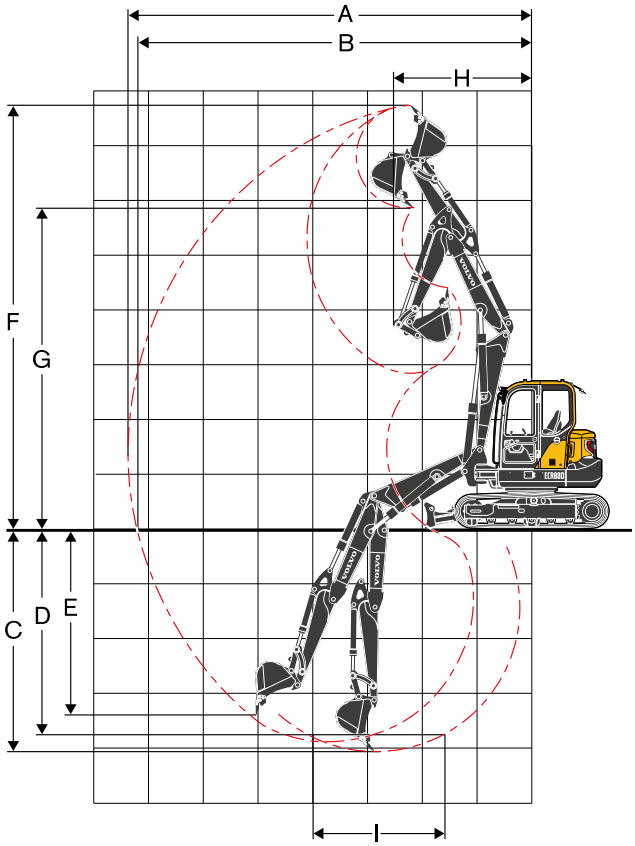

WORKING RANGES						
Description		**Unit**				
Boom		**m**	**3.55 (mono)**		**3.85 (2pcs)**	
Arm		**m**	**1.7**	**2.1**	**1.7**	**2.1**
A	Max. digging reach	mm	6 970	7 350	7 380	7 790
B	Max. digging reach on ground	mm	6 800	7 180	7 220	7 640
C	Max. digging depth	mm	4 130	4 530	4 090	4 480
D	Max.digging depth (l=2 440mm level)	mm	3 750	4 200	3 790	4 220
E	Max. vertical wall digging depth	mm	2 820	3 200	3 430	3 870
F	Max. cutting height	mm	6 790	7 050	7 720	8 240
G	Max. dumping height	mm	4 960	5 220	5 840	6 380
H	Min. front swing radius	mm	2 560	2 640	2 530	2 700
Digging forces with direct fit bucket						
Breakout force (bucket)	SAE J1179	kN	50.7	50.4	50.7	50.4
	ISO 6015	kN	57.2	56.8	57.2	56.8
Tearout force (arm)	SAE J1179	kN	38.9	33.8	38.9	33.8
	ISO 6015	kN	39.8	34.4	39.8	34.4
Rotation angle, bucket		°	190		190	

Specifications

LIFTING CAPACITY ECR88D

Lifting capacity at the arm end without bucket.

For lifting capacity including bucket. Simply subtract actual weight of the direct fit bucket or the bucket with quick coupler from the following values.

		Lifting point	1.0 m		2.0 m		3.0 m		4.0 m		5.0 m		6.0 m		Max. reach		
			Along	Across	Along	Across	Along	Across	Along	Across	Along	Across	Along	Across	Along	Across	mm
Boom 3.55m		5.0 m kg							*1 520	*1 520					*1 600	*1 600	4 585
Arm 1.7m		4.0 m kg							*1 580	*1 580	*1 540	1 390			*1 560	1 230	5 345
Shoe 450mm		3.0 m kg					*2 490	*2 490	*1 890	*1 890	*1 640	1 360			*1 540	1 060	5 789
CWT 1 480kg		2.0 m kg					*3 700	2 830	*2 330	1 840	*1 830	1 310	*1 590	980	*1 580	980	6 003
Dozer blade down		1.0 m kg							*2 690	1 750	*2 000	1 260	*1 630	960	*1 620	950	6 014
		0.0 m kg					*3 800	2 640	*2 810	1 700	*2 070	1 230			*1 670	990	5 825
		-1.0 m kg			*3 560	*3 560	*3 840	2 640	*2 690	1 690	*1 970	1 220			*1 700	1 100	5 410
		-2.0 m kg			*4 790	*4 790	*3 200	2 690	*2 270	1 710					*1 710	1 370	4 695
		-3.0 m kg					*1 880	*1 880							*1 500	*1 500	3 433
Boom 3.55m		5.0 m kg							*1 520	*1 520					*1 600	1 520	4 850
Arm 1.7m		4.0 m kg							*1 580	*1 580	*1 540	1 320			1 470	1 160	5 345
Shoe 450mm		3.0 m kg					*2 490	*2 490	*1 890	1 850	1 630	1 290			1 270	1 000	5 789
CWT 1 480kg		2.0 m kg					3 440	2 650	2 210	1 740	1 580	1 240	1 180	920	1 180	920	6 003
Dozer blade up		1.0 m kg							2 120	1 640	1 530	1 190	1 160	900	1 160	900	6 014
		0.0 m kg					3 240	2 460	2 070	1 590	1 490	1 160			1 200	930	5 825
		-1.0 m kg	*2 460	*2 460	*3 560	*3 560	3 250	2 470	2 050	1 580	1 480	1 150			1 330	1 030	5 410
		-2.0 m kg			*4 790	*4 790	*3 200	2 510	2 080	1 610					1 650	1 280	4 695
		-3.0 m kg					*1 880	*1 880							*1 500	*1 500	3 433
Boom 3.55m		6.0 m kg													*1 510	*1 510	3 965
Arm 2.1m		5.0 m kg									*1 380	*1 380			*1 320	*1 320	5 095
Shoe 450mm		4.0 m kg									*1 340	*1 340			*1 230	1 070	5 776
CWT 1 480kg		3.0 m kg							*1 650	*1 650	*1 470	1 370	*1 390	990	*1 210	940	6 184
Dozer blade down		2.0 m kg					*3 160	2 900	*2 100	1 850	*1 680	1 310	*1 470	970	*1 240	870	6 382
		1.0 m kg					*3 630	2 660	*2 520	1 740	*1 890	1 250	*1 560	940	*1 320	850	6 393
		0.0 m kg					*3 940	2 580	*2 730	1 670	*2 010	1 200	*1 590	920	*1 480	870	6 217
		-1.0 m kg	*2 660	*2 660	*3 090	*3 090	*4 000	2 570	*2 720	1 640	*2 000	1 180			*1 550	950	5 835
		-2.0 m kg	*3 980	*3 980	*4 940	*4 940	*3 490	2 600	*2 440	1 650	*1 720	1 200			*1 580	1 140	5 192
		-3.0 m kg			*3 870	*3 870	*2 510	*2 510	*1 650	*1 650					*1 530	*1 530	4 133
Boom 3.55m		6.0 m kg													*1 510	*1 510	3 965
Arm 2.1m		5.0 m kg									*1 380	1 330			*1 320	1 280	5 095
Shoe 450mm		4.0 m kg									*1 340	1 330			*1 230	1 010	5 776
CWT 1 480kg		3.0 m kg							*1 650	*1 650	*1 470	1 290	1 200	930	1 130	880	6 184
Dozer blade up		2.0 m kg					*3 160	2 720	*2 100	1 750	1 570	1 230	1 170	910	1 050	810	6 382
		1.0 m kg					3 270	2 480	2 110	1 630	1 510	1 170	1 140	880	1 030	790	6 393
		0.0 m kg					3 180	2 400	2 030	1 560	1 460	1 130	1 120	860	1 060	810	6 217
		-1.0 m kg	*2 660	*2 660	*3 090	*3 090	3 170	2 390	2 010	1 540	1 440	1 110			1 160	890	5 835
		-2.0 m kg	*3 980	*3 980	*4 940	*4 940	3 200	2 420	2 020	1 550	1 460	1 120			1 390	1 070	5 192
		-3.0 m kg			*3 870	*3 870	*2 510	2 500	*1 650	1 610					*1 530	*1 530	4 133
Boom 3.55m		5.0 m kg							*1 520	*1 520					*1 600	*1 600	4 585
Arm 1.7m		4.0 m kg							*1 580	*1 580	*1 540	1 470			*1 560	1 310	5 345
CWT 1 690kg		3.0 m kg					*2 490	*2 490	*1 890	*1 890	*1 640	1 440			*1 540	1 130	5 789
Dozer blade down		2.0 m kg					*3 700	2 990	*2 330	1 950	*1 830	1 390	*1 590	1 040	*1 580	1 040	6 003
		1.0 m kg							*2 690	1 860	*2 000	1 340	*1 630	1 020	*1 620	1 020	6 014
		0.0 m kg					*3 800	2 800	*2 810	1 810	*2 070	1 310			*1 670	1 050	5 825
		-1.0 m kg			*3 560	*3 560	*3 840	2 810	*2 690	1 790	*1 970	1 300			*1 700	1 170	5 410
		-2.0 m kg			*4 790	*4 790	*3 200	2 850	*2 270	1 820					*1 710	1 450	4 695
		-3.0 m kg					*1 880	*1 880							*1 500	*1 500	3 433
Boom 3.55m		5.0 m kg							*1 520	*1 520					*1 600	*1 600	4 585
Arm 1.7m		4.0 m kg							*1 580	*1 580	*1 540	1 390			1 550	1 240	5 345
CWT 1 690kg		3.0 m kg					*2 490	*2 490	*1 890	*1 890	*1 640	1 360			1 340	1 060	5 789
Dozer blade up		2.0 m kg					3 620	2 800	2 330	1 840	1 660	1 310	1 250	980	1 250	980	6 003
		1.0 m kg							2 230	1 750	1 610	1 270	1 230	960	1 220	960	6 014
		0.0 m kg					3 410	2 610	2 180	1 700	1 580	1 230			1 270	990	5 825
		-1.0 m kg			*3 560	*3 560	3 420	2 620	2 170	1 690	1 570	1 230			1 410	1 100	5 410
		-2.0 m kg			*4 790	*4 790	*3 200	2 660	2 190	1 710					*1 710	1 370	4 695
		-3.0 m kg					*1 880	*1 880							*1 500	*1 500	3 433
Boom 3.55m		6.0 m kg													*1 510	*1 510	3 965
Arm 2.1m		5.0 m kg									*1 380	*1 380			*1 320	*1 320	5 095
CWT 1 690kg		4.0 m kg									*1 340	*1 340			*1 230	1 140	5 776
Dozer blade down		3.0 m kg							*1 650	*1 650	*1 470	1 450	*1 390	1 060	*1 210	1 000	6 184
		2.0 m kg					*3 160	3 060	*2 100	1 960	*1 680	1 390	*1 470	1 030	*1 240	930	6 382
		1.0 m kg					*3 630	2 820	*2 520	1 850	*1 890	1 330	*1 560	1 000	*1 320	900	6 393
		0.0 m kg					*3 940	2 740	*2 730	1 780	*2 010	1 280	*1 590	980	*1 480	930	6 217
		-1.0 m kg	*2 660	*2 660	*3 090	*3 090	*4 000	2 730	*2 720	1 750	*2 000	1 260			*1 550	1 020	5 835
		-2.0 m kg	*3 980	*3 980	*4 940	*4 940	*3 490	2 760	*2 440	1 760	*1 720	1 280			*1 580	1 220	5 192
		-3.0 m kg			*3 870	*3 870	*2 510	*2 510	*1 650	*1 650					*1 530	*1 530	4 133

Notes: 1. The above loads are in compliance with SAE J1097 and ISO 10567 Hydraulic Excavator Lifting Capacity Standards.

2. Rated loads do not exceed 87% of hydraulic lifting capacity or 75% of tipping load. 3. Rated loads marked with an asterisk (*) are limited by hydraulic capacity rather than tipping load.

LIFTING CAPACITY ECR88D

Lifting capacity at the arm end without bucket.

For lifting capacity including bucket. Simply subtract actual weight of the direct fit bucket or the bucket with quick coupler from the following values.

		Lifting point	1.0 m		2.0 m		3.0 m		4.0 m		5.0 m		6.0 m		Max. reach		
			Along	Across	Along	Across	Along	Across	Along	Across	Along	Across	Along	Across	Along	Across	mm
Boom	3.55m	6.0 m kg													*1 510	*1 510	3 965
Arm	2.1m	5.0 m kg									*1 380	*1 380			*1 320	*1 320	5 095
CWT	1 690kg	4.0 m kg									*1 340	*1 340			*1 230	1 080	5 776
Dozer blade up		3.0 m kg							*1 650	*1 650	*1 470	1 370	1 260	1 000	1 200	940	6 184
		2.0 m kg					*3 160	2 870	*2 100	1 850	1 660	1 310	1 240	970	1 120	870	6 382
		1.0 m kg					3 440	2 640	2 220	1 740	1 590	1 250	1 210	940	1 090	850	6 393
		0.0 m kg					3 360	2 560	2 150	1 670	1 550	1 210	1 190	920	1 130	870	6 217
		-1.0 m kg	*2 660	*2 660	*3 090	*3 090	3 350	2 550	2 120	1 640	1 530	1 190			1 230	960	5 835
		-2.0 m kg	*3 980	*3 980	*4 940	*4 940	3 380	2 580	2 130	1 650	1 540	1 200			1 470	1 140	5 192
		-3.0 m kg			*3 870	*3 870	*2 510	*2 510	*1 650	*1 650					*1 530	*1 530	4 133
Boom	3.85m 2piece	6.0 m kg							*2 060	*2 060					*2 060	2 060	4 029
Arm	1.7m	5.0 m kg							*1 870	*1 870	*1 710	1 430			*1 690	1 350	5 142
Shoe	450mm	4.0 m kg					*2 530	*2 530	*1 990	*1 990	*1 700	1 430			*1 540	1 070	5 816
CWT	1 690kg	3.0 m kg							*2 270	1 970	*1 800	1 380	*1 530	1 000	*1 480	930	6 221
Dozer blade down		2.0 m kg							*2 570	1 830	*1 920	1 310	*1 550	980	*1 420	870	6 418
		1.0 m kg							*2 690	1 710	*1 980	1 240	*1 540	940	*1 360	850	6 428
		0.0 m kg							*2 570	1 660	*1 920	1 210	*1 440	920	*1 280	870	6 254
		-1.0 m kg					*2 810	2 610	*2 240	1 650	*1 690	1 190			*1 170	960	5 875
		-2.0 m kg					*2 050	*2 050	*1 680	*1 680	*1 160	*1 160			*950	*950	5 238
Boom	3.85m 2piece	6.0 m kg							*2 060	*2 060					*2 060	*2 060	4 029
Arm	1.7m	5.0 m kg							*1 870	*1 870	1 710	1 460			1 610	1 380	5 142
Shoe	450mm	4.0 m kg					*2 530	*2 530	*1 990	*1 990	*1 700	1 460			1 290	1 100	5 816
CWT	1 690kg	3.0 m kg							*2 270	2 010	1 650	1 410	1 210	1 030	1 130	950	6 221
Dozer blade up		2.0 m kg							2 210	1 860	1 580	1 340	1 180	1 000	1 060	880	6 418
		1.0 m kg							2 090	1 750	1 510	1 270	1 150	970	1 040	860	6 428
		0.0 m kg							2 040	1 700	1 470	1 230	1 130	950	1 070	890	6 254
		-1.0 m kg					*2 810	2 680	2 030	1 690	1 460	1 220			*1 170	980	5 875
		-2.0 m kg					*2 050	*2 050	*1 680	*1 680	*1 160	*1 160			*950	*950	5 238
Boom	3.85m 2piece	7.0 m kg													*2 370	*2 370	2 906
Arm	2.1m	6.0 m kg							*1 750	*1 750					*1 540	*1 540	4 679
Shoe	450mm	5.0 m kg							*1 670	*1 670	*1 530	1 470			*1 300	1 150	5 640
CWT	1 690kg	4.0 m kg							*1 800	*1 800	*1 560	1 450	*1 410	1 030	*1 200	940	6 251
Dozer blade down		3.0 m kg					*2 900	*2 900	*2 080	2 010	*1 680	1 390	*1 440	1 010	*1 170	820	6 625
		2.0 m kg							*2 410	1 840	*1 820	1 310	*1 490	970	*1 170	770	6 809
		1.0 m kg							*2 620	1 700	*1 920	1 230	*1 510	930	*1 220	750	6 818
		0.0 m kg					*2 150	*2 150	*2 590	1 630	*1 910	1 180	*1 470	900	*1 170	770	6 656
		-1.0 m kg			*2 060	*2 060	*3 160	2 520	*2 350	1 600	*1 760	1 150	*1 280	890	*1 080	830	6 305
		-2.0 m kg			*2 970	*2 970	*2 450	*2 450	*1 890	1 620	*1 390	1 160			*930	*930	5 726
		-3.0 m kg					*1 400	*1 400	*1 090	*1 090					*590	*590	4 816
Boom	3.85m 2piece	7.0 m kg													*2 370	*2 370	2 906
Arm	2.1m	6.0 m kg							*1 750	*1 750					*1 540	*1 540	4 679
Shoe	450mm	5.0 m kg							*1 670	*1 670	*1 530	1 490			*1 300	1 170	5 640
CWT	1 690kg	4.0 m kg							*1 800	*1 800	*1 560	1 470	1 240	1 050	1 140	960	6 251
Dozer blade up		3.0 m kg					*2 900	*2 900	*2 080	2 050	1 660	1 410	1 220	1 030	1 010	840	6 625
		2.0 m kg							2 230	1 880	1 580	1 330	1 180	990	940	780	6 809
		1.0 m kg							2 080	1 740	1 500	1 260	1 140	950	920	770	6 818
		0.0 m kg					*2 150	*2 150	2 000	1 670	1 450	1 200	1 110	920	950	780	6 656
		-1.0 m kg			*2 060	*2 060	3 140	2 590	1 980	1 640	1 420	1 180	1 100	910	1 030	850	6 305
		-2.0 m kg			*2 970	*2 970	*2 450	*2 450	*1 890	1 660	*1 390	1 190			*930	*930	5 726
		-3.0 m kg					*1 400	*1 400	*1 090	*1 090					*590	*590	4 816

Notes: 1. The above loads are in compliance with SAE J1097 and ISO 10567 Hydraulic Excavator Lifting Capacity Standards.

2. Rated loads do not exceed 87% of hydraulic lifting capacity or 75% of tipping load. 3. Rated loads marked with an asterisk (*) are limited by hydraulic capacity rather than tipping load.

Equipment

STANDARD EQUIPMENT
Engine
Low-emission Tier 4f / Stage IIIB compliant diesel engine
Standard cooling system
Two-stage air filter
Fuel filter and water separator
Alternator, 70 A
Electric / Electronic control system
Safe engine start function
Automatic idling system
Halogen working lights:
Cab-mounted 2 (front), Boom-mounted 1
Battery, 12 V / 100 Ah
Start motor, 12 V / 2.5 kW
Monitor and keypad
Master electrical disconnect switch
Frame
1 480kg counterweight
Under cover
Dozer blade
Undercarriage
Greased and sealed track link
450mm rubber track
Hydraulic system
Automatic two speed travel motors
Cylinder cushioning
Hydraulic fluid mineral 46
Cab and interior
Cab, includes:
Glasses
Cup holders
Large storage area
Door locks
Floor mat
Horn
2 inch Seat belt
Heater and air-conditioner
Fabric operator seat with suspension without heater
Control joystick
Travel pedals and hand levers
AM/FM stereo
Master key

OPTIONAL EQUIPMENT
Electric / Electronic control system
Fuel filler pump: 35 l/min, with automatic shut-off
Extra working lights:
Cab-mounted 1 (rear)
2 piece boom
Caretrack
Travel alarm
Anti theft, code-lock
Rotating warning beacon
Undercarriage / Superstructure
450mm, 600mm steel track
450mm rubber pad
Heavy counterweight
Frame
Rearview mirror
Dozer blade with floating function
Hydraulic system
Hydraulic piping:
Breaker & shear (max. flow and pressure: 90lpm, 32.4Mpa)
Slope & rotator (max. flow and pressure: 35lpm, 14.7Mpa)
Grapple
Quick coupler
Pilot control pattern change
Hose rupture valve for boom and arm
Overload warning device
Hydraulic oil, ISO VG 32, 68
Hydraulic oil, biodegradable 46
Hydraulic oil, longlife oil 46
Arm cyl Pipe with HRV 2 piece boom
Cab and interior
Carecab
Canopy
Fabric operator seat with suspension with heater
PVC operator seat with suspension
Control joystick, X3 proportional
Seat belt, 3 inch retractable
AM/FM stereo with CD player and USB input
Mechanical hour meter
Cab mounted FOG (Falling Object Guard)
FOPS (Falling Object Protection Structure)
Sun screen, front/roof
Safety net
Digging Equipment
2pcs boom: 3.85m
Arm: 2.1m
Service
Tool kit, full scale
Spare parts

SELECTION OF VOLVO OPTIONAL EQUIPMENT

Slope and rotator piping

Dozer float

Caretrack

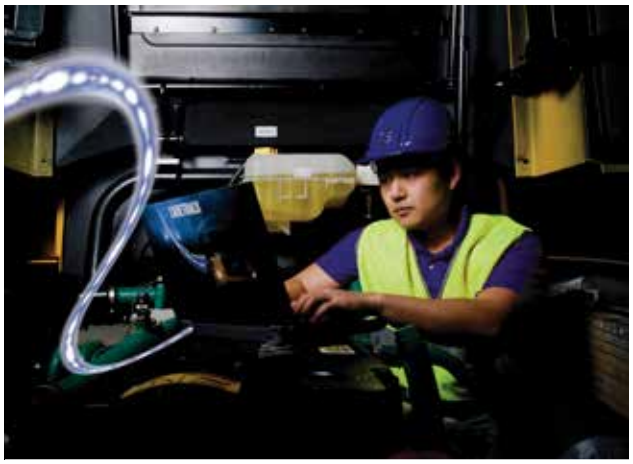

Fuel filler pump

Two-piece boom (ECR88D)

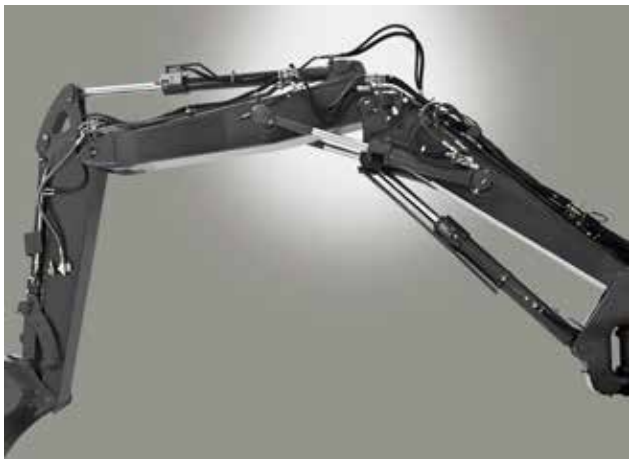

Anti-theft

Not all products are available in all markets. Under our policy of continuous improvement, we reserve the right to change specifications and design without prior notice. The illustrations do not necessarily show the standard version of the machine.

Ref. No 20036777_G / English-21 / 2017.12 / CEX / Volvo, Global Marketing

VOLVO

Volvo Construction Equipment

www.volvoce.com