428F2

Backhoe Loader

Cat® 3054C DIT Diesel Engine	Standard	Optional
Gross Power ISO 14396	68.5 kW	74.5 kW
Net Power ISO 9249	64.9 kW	70.9 kW
Cat C4.4 Engine	**Optional**	**Optional**
Gross Power ISO 14396	70 kW	74.5 kW
Net Power ISO 9249	65.2 kW	70.1 kW

Weights	
Operating Weight	8425 kg
Backhoe Digging Depth	
Digging Depth, SAE Maximum	
Standard Stick	4278 mm
E-Stick Retracted – 4.26 m	4281 mm
E-Stick Extended – 4.26 m	5274 mm

428F2 Features

Product Link™

A feature that really allows you to get the most from your Cat Backhoe Loader; view important machine information when you are away from the machine, or even track the machines location. The Product Link option will really help you get the highest possible productivity from your machine and stay in control.

Cab and Controls

The introduction of the new cab to the Cat Backhoe Loader provides a comfortable and easy to use operator environment. With the ability to customize your experience, the all new cab allows the operator to perform in greater comfort and enjoy the latest technologies available on today's generation of backhoe loaders.

Powerful Hydraulics

The F2 Series machines really make an impact. High pump flow in a superior hydraulic system allows the operator excellent hydraulic performance at their fingertips.

Electro-Deposition Coating

At Caterpillar we believe in built in quality. The 428F2 has been treated with an electro deposited (E-Coat) primer which completely seals the metallic components of the machines structure.

Contents

Operator Station....4
Power Train....6
Hydraulics....8
Parallel Lift Loader....9
Backhoe....10
Work Tools....11
Serviceability....12
Customer Support....13
Specifications....14
Standard and Optional Equipment....18

Caterpillar has a well proven history in the construction equipment industry and has been producing the highest quality machines for 90 years, making progress possible and driving positive and sustainable change on every continent. For 30 years Caterpillar has produced the British built backhoe loader. From the A Series to this new F2 Series we have done our best to produce a machine that is designed with the operator in mind, providing reliability, power and a quality operator environment. We have combined 30 years of passion, expertise and experience to create the latest Backhoe Loader offering from Caterpillar, the F2.

Operator Station

Seen, Not Heard

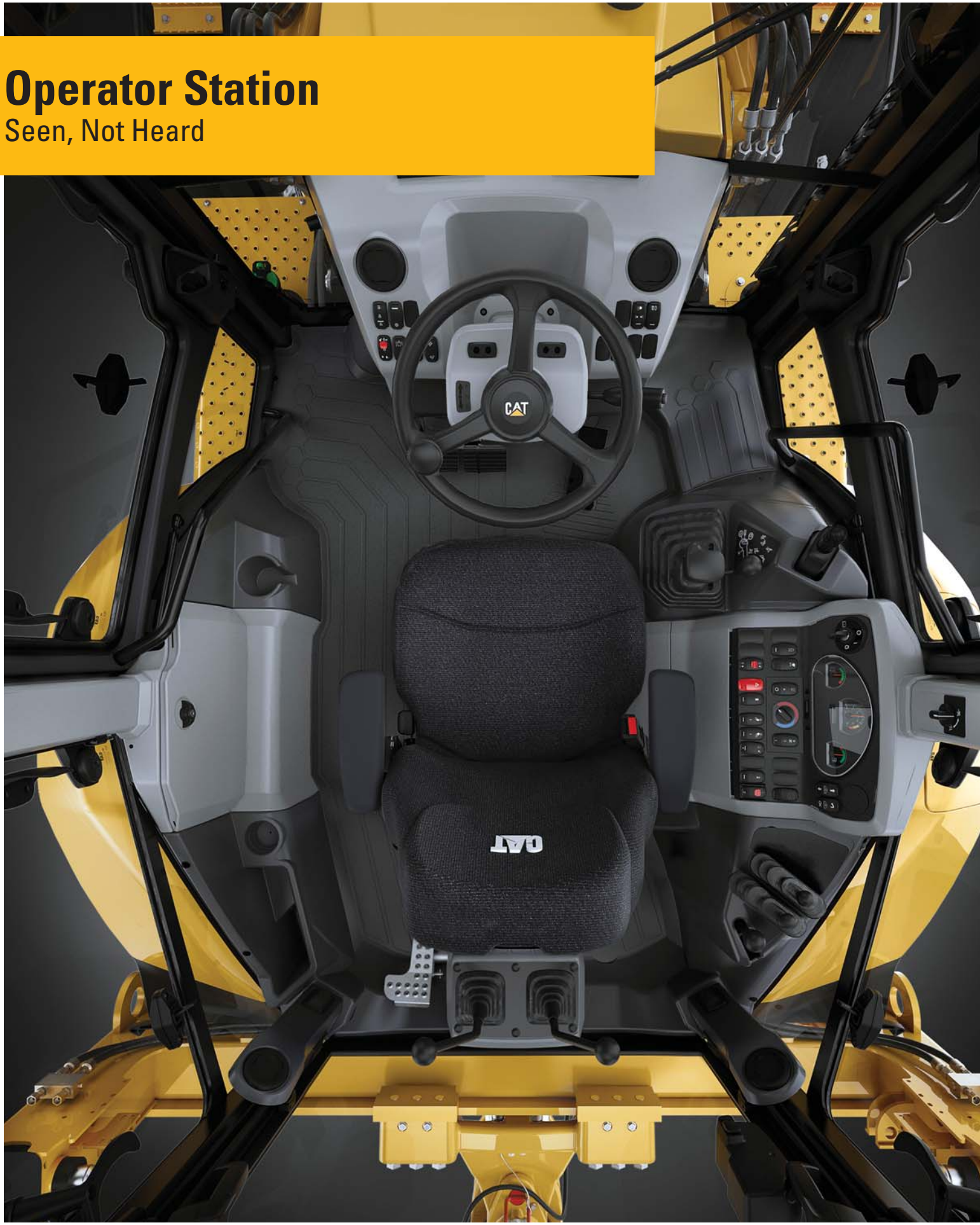

The Class Leading Operator Environment Just Got Better

- 74 dB(A) internal sound level across the range no matter the engine option.
- Heated seat to keep the operator warm no matter what the conditions are.
- Fantastic layout of switches and controls provide an ergonomic and comfortable operating environment all day long.
- A redesigned roof cap provides the operator with superior visibility to the loader at maximum dump height, from the comfort of the seat.
- Secure your investment with the Cat Backhoe Loader security system designed specifically for the Cat Backhoe Loader. This device will keep your investment secure, while providing easy access for up to 25 specified people.
- The loader control now gives you more power at your fingertips: differential lock, transmission neutralizer and auxiliary control.
- The cab design now incorporates a flat profile and flat glass to ensure replacement and security is as easy as possible.

The 428F2 is fitted with mechanical controls providing low effort operation, with the ability to choose between ISO (Excavator) or SAE (Backhoe) control patterns. Providing easy and safe operation for operators of any experience or ability.

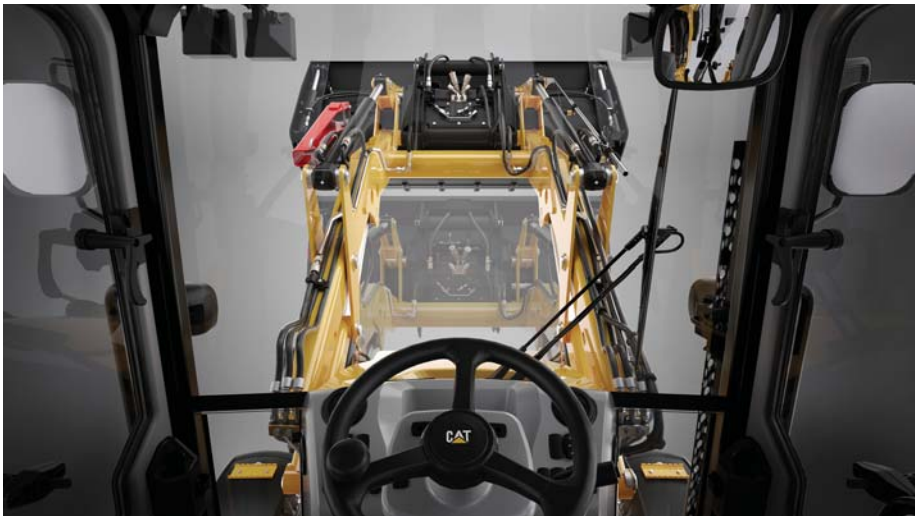

The Proven Cat Engine Delivers Reliable Power on Demand

- The choice of a 68.5 kW, 70 kW or 74.5 kW power rating is available as an EU Stage II or an EU Stage IIIA engine. All options provide excellent performance for all applications.
- Outstanding fuel economy contributes to low owning and operating costs.
- A robust power pack, this engine has been seen in many divisions of Cat for a number of years and remains today a very popular option, delivering power when it is needed most.
- Proven world-class manufacturing and core engine designs ensure reliability, quiet operation, and many hours of productive life.

Axles and Differential Lock

The F2 Series of Cat Backhoe Loaders boast Heavy Duty Cat Axles

- Providing high durability, low noise levels and superb traction on uneven surfaces.
- Three chamber system provides constant lubrication of the heavy duty running gear and bearings on all gradients.
- 100% locking differential is fitted as standard on the Cat Backhoe Loader, ensuring maximum traction in all conditions.

Power Shift Transmission

This optional six speed transmission will perfectly match itself to the application, carefully selecting the appropriate gear whether you're driving between job sites or using the loader function. Now the gear box has been tweaked, smoothing gear shifts and extending the top gear providing a more efficient and comfortable driving experience.

Torque Lock-Up

The lock-up torque converter provides a direct ratio between power pack and driveline when in the roading gears. This results in a 16% decrease in fuel consumption and an 11% increased average speed. The lock-up torque converter is an invaluable addition for those traveling between job sites.

Power Train

Powerful, Proven, Efficient

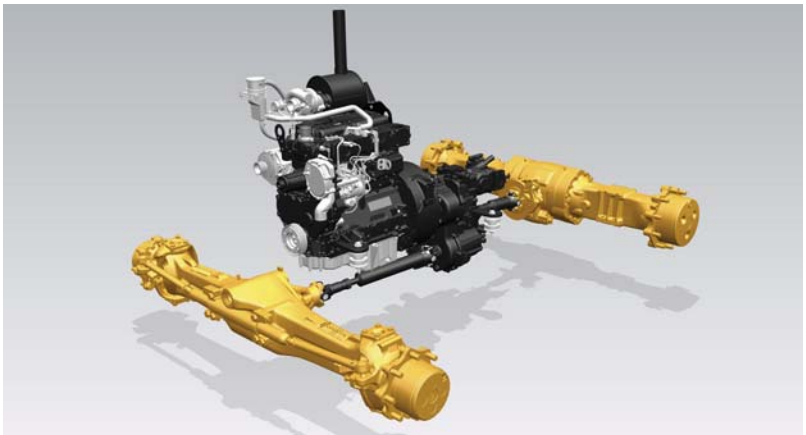

Hydraulics

Unmatched Performance

Powerful Load Sensing Hydraulic System

Intelligent hydraulics provide the right amount of power at the right time. Load sensing, closed center hydraulic system, actively matches hydraulic power and flow, allowing full hydraulic forces at any engine speed.

- Flow-sharing valves actively manage the flow of oil between each function of the machine. When the operator demands multiple operations the machine responds, providing smooth, effortless operation.
- The torque limiter on the machine helps to provide perfect synchronization between the engine, transmission and hydraulic system.
- Cat Backhoe Loaders have always provided a superior solution and this machine is no different. A high capacity variable displacement piston pump allows for perfect matching of power and operator demand, providing power when it is needed as well as great fuel economy.

Parallel Lift Loader

Reaching New Heights

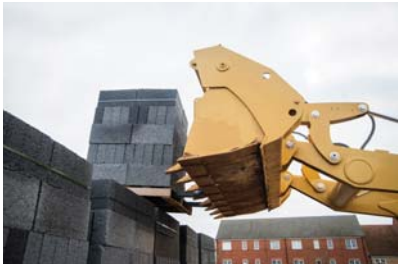

Loader Performance

The proven design of the F2 loader provides ultimate performance. This machine makes light work of lifting and loading.

- Parallel lift loader arms offer superb forward visibility and self leveling, ensuring excellent material retention throughout the lift and lower cycles.
- Ride Control option offers loader suspension to improve ride comfort when moving around the job site or transporting the machine on the road. There is also the added benefit of increased material retention providing an invaluable boost in productivity.
- The Return to Dig system returns the bucket to level, great for applications with repetitive work cycles.

Backhoe
Built for the Task

Excavator Style Backhoe
Whether close-up truck loading or digging over obstacles, the excavator style boom tackles the toughest jobs with ease. Combining versatility with the powerful breakout forces, the controllability of the load sensing, flow-sharing hydraulic system and the 428F2 is capable of high levels of productivity with minimum effort. The boom is a narrow design, ensuring maximum visibility to the work tool and ground.

Extendible Stick
The 428F2 is available with an extendible stick that increases dig depth and reach capability increasing the machines versatility and utilization, reducing the amount of machine repositioning and therefore reducing site damage. A sliding inner section design helps to ensure the wear pads remain as dirt free as possible, extending adjustment and replacement intervals. Auxiliary lines, for operating hydraulic work tools, have been routed so that they are protected from damage when working in the narrowest of trenches.

Side Shift Frame
The F2 Series Side Shift Frame has exterior locking clamps, with no disassembly needed when servicing. The frame is a solid design with E-Coat protection, this prevents material build up in the frame and reduces the risk of rust, increasing the life of the frame.

Cat Cushion Swing
The 428F2 is equipped with Cat Cushion Swing, which enables very fast trenching by damping the boom oscillation during trenching cycles.

Powered Side Shift (optional)
Provides a hydraulic service to allow the operator to easily position the backhoe across the full width of the Side Shift Frame. Ideal for use in areas with minimal space and utility applications such as gas, electrical, and telecoms.

Work Tools

A Solution for Every Job

Loader

Loader Buckets

General Purpose loader buckets are available as well as the hydraulically operated Multi Purpose bucket. These come in a range of sizes from 0.96 m^3 to 1.3 m^3.

Other Available Loader Tools Include:

- Brooms
- Material Handling Arms
- Truss Booms
- Forks
- Blades

Backhoe

Excavating Buckets

Cat Work Tools provide a range of buckets in various sizes. It is easy to find the correct bucket for the application with a range including:

- Standard Duty
- Heavy Duty
- High Capacity
- Rock
- Ditching

Other Available Backhoe Tools Include:

- Cold Planers
- Hammers
- Augers
- Vibratory Compaction Plates

Backhoe Quick Coupler

Manual or hydraulic backhoe couplers make rear tool exchange quick, easy and safe. New Cat dual lock couplers have a self adjusting wedge design to ensure a tight fit. They also feature a safety lock which automatically engages.

Serviceability

Less Time Servicing, More Time Working

Daily Service Points

Caterpillar understands that the easier a task is the more likely it is to be done. We have ensured that to service the Cat Backhoe Loader is as simple as it can be. All daily check points are grouped together and are easy to access. Sealed for life axles and driveshafts remove the need for operators to grease the time consuming and awkward areas below the machine.

Wear Pad Adjustments

The Extendible Stick (E-Stick) is designed to be self lubricating, to minimize the need for operator interaction. The stabilizers and E-Stick all have easily adjustable wear pads that require no disassembly. When wear pad adjustments are necessary, the adjustment bolts are easy to access, taking minutes to complete the adjustment.

Cat Filters

All Cat filters are vertically mounted for spill free servicing and reduced oil contamination. These low micron filters remove microscopic particles from the oil, keeping the engine, transmission and hydraulic system running smoothly for years.

Hinged Cooling Pack

The hood opens to reveal the engine and a unique to Cat hinged cooling pack. The air conditioning pack lifts up and the radiator tilts forward with no tooling required, giving easy access for debris removal whether you are in the workshop or on a job site, keeping cooling performance to an optimum.

Customer Support

Unrivaled Customer Support Network

Customer Support Agreements

Your Cat dealer can offer a comprehensive range of CSA's which can be individually tailored to suit your finances and requirements. Dealers can offer a range of options from a full preventative maintenance with S·O·S℠ package to a parts only CSA. Protect your valuable investment and know exactly what your monthly payments will be to help you run your business.

Finance

Have you explored the range of options available from your dealer to finance your machine? They can offer a selection of attractive packages tailored to suit your every requirement.

Machine Selection

Your dealer can help you with your machine purchase decision, based on your requirements and help keep operating costs to a minimum. Is the machine you have in mind exactly the best for your job, or could there be a more suitable solution?

Training and Support

Speak to your dealer about additional support. They can advise you on operating techniques for your machines which will minimize wear and tear, maximize productivity, lower owning and operating costs and help you make the most of the fantastic features offered on the Cat Backhoe Loaders.

428F2 Backhoe Loader Specifications

Engine

	Stage II Standard Offering*	Stage II Optional Offering*	Stage IIIA Optional Offering**	Stage IIIA Optional Offering**
Engine	3054C 68.5 kW Mechanical Turbo	3054C 74.5 kW Mechanical Turbo	C4.4 70 kW Mechanical Turbo Intercooled	C4.4 74.5 kW Mechanical Turbo Intercooled
Rated Power (standard) @ 2,200 rpm				
Gross Power ISO 14396	68.5 kW/93 hp	74.5 kW/101 hp	70 kW/95 hp	74.5 kW/102 hp
Net Power Rating @ 2,200 rpm				
ISO 9249	64.9 kW/88 hp	70.9 kW/96 hp	65.2 kW/89 hp	70.1 kW/95 hp
EEC 80/1269	64.9 kW/88 hp	70.9 kW/96 hp	65.2 kW/89 hp	70.1 kW/95 hp
Torque Rise (net) @ 1,400 rpm	38%	31%	37%	32%
Maximum Torque	384 N·m	397 N·m	383 N·m	397 N·m
Dimensions				
Bore	105 mm	105 mm	105 mm	105 mm
Stroke	127 mm	127 mm	127 mm	127 mm
Displacement	4.4 L	4.4 L	4.4 L	4.4 L

*Meets Stage II/Tier 2 equivalent emission standards.
**Meets Stage IIIA/Tier 3 equivalent emission standards.
• Net power advertised is the power available at the flywheel when the engine is equipped with fan, air cleaner, muffler and alternator.
• No derating required up to 2286 m altitude. Auto derate protects hydraulic and transmission systems.

Transmission

Travel speeds of two wheel drive backhoe loader at full throttle, when equipped with 16.9×28 rear tires.

	Power Shuttle	Auto-Shift	Auto-Shift (Optional)
Forward			
1st	5.6 km/h	6 km/h	6 km/h
2nd	9.3 km/h	9.6 km/h	9.6 km/h
3rd	21 km/h	12 km/h	12 km/h
4th	40 km/h	20 km/h	20 km/h
5th		27 km/h	25 km/h
6th		40 km/h	40 km/h
Reverse			
1st	5.6 km/h	6 km/h	6 km/h
2nd	9.3 km/h	13 km/h	13 km/h
3rd	21 km/h	27 km/h	27 km/h
4th	40 km/h		

Service Refill Capacities

Cooling System with A/C	22.5 L
Fuel Tank	160 L
Engine Oil with Filter	8.8 L
Transmission (Power Shuttle)	
AWD	15 L
Transmission (Auto-Shift)	
AWD	19 L
Rear Axle	16.5 L
Planetaries	1.7 L
Front Axle (AWD)	11 L
Planetaries	0.7 L
Hydraulic System	95 L
Hydraulic Tank	40 L

Hydraulic System

Type	Closed Center
Pump Type	Variable Flow, Axial Piston
Maximum Pump Capacity	160 L/min
System Pressure	
Backhoe	250 Bar
Loader	250 Bar

Noise Level*

Inside Cab	74 dB(A)
Outside Cab	101 dB(A)

*Stage IIIA with EN474 Prep. Pack.

Weights*

Operating Weight (estimated) (C4.4)	8425 kg
Operating Weight (Maximum) (ROPS capacity)	11 000 kg
Cab, ROPS/FOPS	129 kg
Auto-Shift Transmission	55 kg
Ride Control	11 kg
Air Conditioning	42 kg
MP Bucket (1.00 m^3)	
With Fold-over Forks	871 kg
Without Fold-over Forks	611 kg
4.3 m Extendible Stick (excludes front counterweight)	203 kg
Counterweights	
Base	115 kg
Medium	240 kg
Maximum	460 kg
Minimum Counterweight Recommendations – Standard Stick	
Loader Bucket	
GP	115 kg
MP	0 kg
Minimum Counterweight Recommendations – Extendible Stick	
Loader Bucket	
GP	460 kg
MP	0 kg

*Machine Configuration – standard engine, standard stick hoe, standard cab with A/C, AWD standard shift transmission, 1.03 m^3 MP loader bucket, 24 inch standard duty hoe bucket, 12.5/80-18 and 16.9-28 tires, no counterweight, 80 kg operator and full fuel tank.

Axles

All Wheel Drive (AWD)

Features

- Heavy-duty rear axle with self adjusting inboard brakes, differential lock and final drives.
- AWD is engaged by front console panel switch or by brake pedal during all-wheel-braking operation. AWD can be engaged on the move, under load, in any gear, forward or reverse. AWD has outer final drives for easy maintenance.
- AWD front axle is pendulum mounted and permanently sealed and lubricated, requiring no daily maintenance. Also features double-acting steering cylinder with 52° steering angle for increased maneuverability.

Axle Ratings

Front Axle, AWD	
Static	22 964 kg
Dynamic	9186 kg
Rear Axle	
Static	22 964 kg
Dynamic	9186 kg

Steering

Type	Front Wheel
Power Steering	Hydrostatic
AWD Cylinder, One (1) Double-acting	
Bore	65 mm
Stroke	120 mm
Rod Diameter	36 mm
Turning Circle	
AWD (inner wheel not braked)	
Outside Front Wheels	8.18 m
Outside Widest Loader Bucket	10.97 m

Brakes

Fully enclosed boosted, hydraulic, multiple discs.

Features

- Inboard oil-immersed, hydraulically actuated multiple Kevlar discs on final drive input shaft.
- Completely enclosed and sealed.
- Self-adjusting.
- Dual foot-operated boosted brake pedals can be interlocked for roading.
- Parking/secondary brakes are independent of the service brake system. Parking brake is mechanically applied through a hand lever located in the right side console.
- Meets ISO 3450:1996 requirements.

428F2 Backhoe Loader Specifications

Machine Dimensions

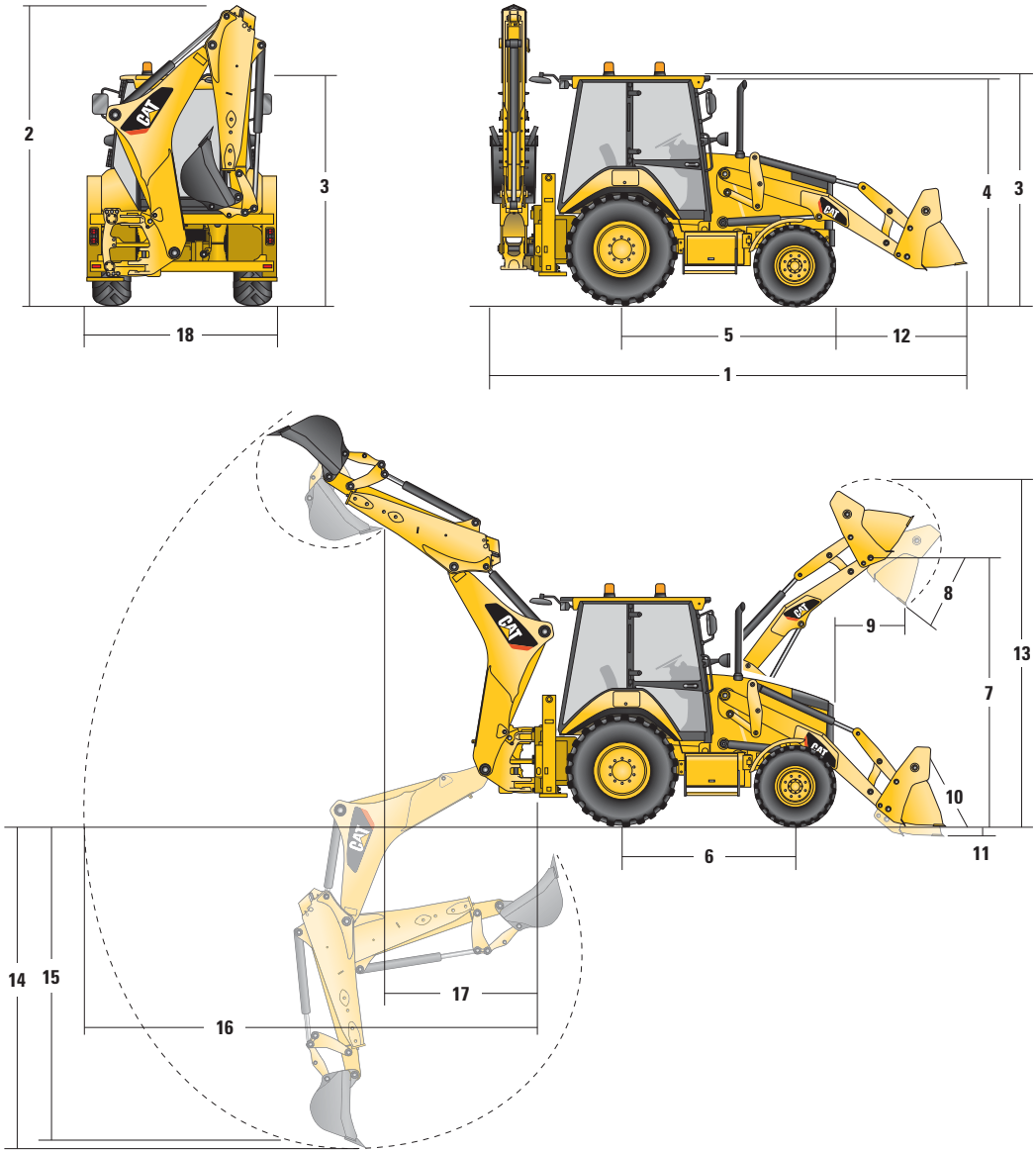

	PL Loader GP – 1.0 m³	MP – 1.03 m³	MP with forks – 1.03 m³
1 Overall Length in Roading Position	5734 mm	5734 mm	5734 mm
Overall Transportation Length	5704 mm	5704 mm	5704 mm
2 Overall Transportation Height – 4.3 m	3779 mm	3779 mm	3779 mm
Overall Width	2352 mm	2352 mm	2352 mm
3 Height to Top of Cab/Canopy	2897 mm	2897 mm	2897 mm
4 Height to Top of Exhaust Stack	2744 mm	2744 mm	2744 mm
5 Rear Axle Centerline to Front Grill	2705 mm	2705 mm	2705 mm
6 Wheelbase AWD	2200 mm	2200 mm	2200 mm

Dimensions and performance specifications shown are for machines equipped with 12.5/80-18 SGL front tires, 16.9-28c rear tires, standard cab, standard stick with 24 inch standard duty bucket, and 1.0 m³ GP loader bucket and standard equipment unless otherwise specified.

Loader Bucket Dimensions and Performance

		GP – 1.0 m³	MP – 1.03 m³	MP with forks – 1.03 m³
	Capacity	1.0 m³	1.03 m³	1.03 m³
	Width	2406 mm	2406 mm	2406 mm
	Lift Capacity at Maximum Height	3817 kg	3580 kg	3240 kg
	Lift Breakout Force	54.82 kN	53.34 kN	50.24 kN
	Tilt Breakout Force	54.84 kN	60.32 kN	58.79 kN
	Tipping Load at Breakout Point	6557 kg	6537 kg	6260 kg
7	Maximum Hinge Pin Height	3497 mm	3497 mm	3497 mm
8	Dump Angle at Full Height	45°	45°	45°
	Dump Height at Maximum Angle	2796 mm	2823 mm	2823 mm
9	Dump Reach at Maximum Angle	805 mm	731 mm	731 mm
10	Maximum Bucket Rollback at Ground Level	38°	39°	39°
11	Digging Depth	61 mm	94 mm	94 mm
	Maximum Grading Angle	114°	116°	116°
12	Grill to Bucket Cutting Edge, Carry Position	1467 mm	1419 mm	1419 mm
13	Maximum Operating Height	4394 mm	4427 mm	4883 mm
	Bucket Weight (excludes teeth and forks)	428 kg	611 kg	705 kg

Backhoe Dimensions and Performance

		Standard Stick – 4.3 m	E-stick Retracted – 4.3 m	E-stick Extended – 4.3 m
14	Digging Depth, SAE Maximum	4278 mm	4281 mm	5274 mm
	Digging Depth, Manufacturer's Maximum	4775 mm	4778 mm	5696 mm
15	Digging Depth, 2400 mm Flat Bottom	3893 mm	3897 mm	4966 mm
	Digging Depth, 600 mm Flat Bottom	4235 mm	4239 mm	5235 mm
	Digging Depth, 600 mm Flat Bottom, Manufacturer's	4748 mm	4753 mm	5696 mm
	Reach from Rear Axle Centerline at Ground Line	6739 mm	6744 mm	7670 mm
16	Reach from Swing Pivot at Ground Line	5649 mm	5654 mm	6580 mm
	Maximum Operating Height	5691 mm	5692 mm	6297 mm
	Loading Height	4016 mm	4025 mm	4630 mm
17	Loading Reach	1669 mm	1617 mm	2475 mm
	Swing Arc	180°	180°	180°
	Bucket Rotation	205°	205°	205°
18	Stabilizer Overall Width	2352 mm	2352 mm	2352 mm
	Bucket Dig Force	63.44 kN	63.42 kN	63.42 kN
	Stick Dig Force	36.17 kN	36.90 kN	26.98 kN

Dimensions and performance specifications shown are for machines equipped with 12.5/80-18 SGL front tires, 16.9-28c rear tires, standard cab, standard stick with 24 inch standard duty bucket, and 1.0 m³ GP loader bucket and standard equipment unless otherwise specified.

428F2 Standard and Optional Equipment

Standard and Optional Equipment

Standard and Optional equipment may vary. Consult your Cat dealer for details.

	Standard	Optional
Cab		
Cab, Deluxe	—	✓
Cab, Standard	✓	—
Canopy, Plus	—	✓
*See Cab Options Page		
Tires/Steering/Brakes		
All Wheel Drive	✓	—
100% Differential Lock	✓	—
Hydraulic Boosted Brakes (dual pedals)	✓	—
Tires 26 inch	✓	—
Tires 28 inch	—	✓
Engine/Transmission		
Battery 750 CCA, Maintenance Free (standard)	✓	—
Battery 750 CCA, Maintenance Free (heavy duty)	—	✓
Engine 68.5 kW (93 hp) Cat 3054C DIT	✓	—
Engine 74.5 kW (101 hp) Cat 3054C DIT	—	✓
Engine 70 kW (95 hp) Cat C4.4 Turbocharged	✓	—
Engine 74.5 kW (101 hp) Cat C4.4 Turbocharged	—	✓
Engine Block Heater	—	✓
Jump Start Connector	✓	—
Transmission Neutralizer	✓	—
Transmission, 4-Speed Manual	✓	—
Transmission, 6-Speed Automatic	—	✓
Transmission, 6-Speed Automatic (torque lock-up)	—	✓
Input		
Controls, Mechanical Lever	✓	—
Power Steering, Hydrostatic	✓	—
Other Attachments		
Counterweight, 115 kg	—	✓
Counterweight, 240 kg	—	✓
Counterweight, 460 kg	—	✓
Front Fenders	—	✓
Street Pads, Stabilizers	—	✓
Tool Storage Box	✓	—
Transport Tie-downs	✓	—

	Standard	Optional
Guards		
Guard, Teeth (GP/MP)	—	✓
Guard, Driveshaft	—	✓
Guard, Tail Lights	—	✓
Loader Safety Brace	✓	—
Object Handling Kit	—	✓
Field Installed Attachments		
Powered Side Shift (PSS)	—	✓
Boom Sticks and Linkages – Backhoe		
Quick Coupler, Hydraulic (backhoe)	—	✓
Quick Coupler, Mechanical (backhoe)	—	✓
Stick, Extending (4.3 m)	—	✓
Stick, Standard (4.3 m)	✓	—
Transport Lock, Swing	✓	—
Transport Lock, Boom	✓	—
Boom Sticks and Linkages – Loader		
Loader Cutting Edge (2 pieces)	—	✓
Hydraulics		
Hydraulic Pump (160 L/min)	✓	—
Hydraulic Quick Disconnects (twist to connect)	—	✓
Side Shift Lock (electro-hydraulic)	✓	—
Hydraulic Oil Cooler	✓	—
Hydraulics – Backhoe		
Hydraulic Lines, 1-Way	—	✓
Hydraulic Lines, 2-Way	—	✓
Hydraulics – Loader		
Loader Kickout, Float	✓	—
Loader Kickout, Return to Dig	✓	—
Auto Ride Control	—	✓
Parallel Lift	✓	—
Electrical		
Product Link, Cellular	—	✓
Product Link, Satellite	—	✓
Reversing Alarm	✓	—
Beacon, Strobe	—	✓
Beacon, Standard	—	✓

Cab Options

	Canopy Plus	Standard	Deluxe
Air Recirculation Control	—	—	✓
Air Conditioning	—	Optional	Optional
Auto-Up Stabilizers	—	—	✓
Beacon Socket (×2)	✓	✓	✓
Radio, Premium	Optional	Optional	Optional
Radio, Entry Level	Optional	Optional	Optional
Cab Internal Light	Optional	✓	—
Cab Internal Light (with courtesy setting)	—	—	✓
Cup Holders (×2)	✓	✓	✓
Differential Lock Button on Loader Control	✓	✓	✓
Face Fan	Optional	Optional	Optional
Removable Floor Mat	✓	✓	✓
Front and Rear Side Opening Windows	—	✓	✓
Front Headlights*	✓	✓	✓
Full Width Perforated Sun Visor	—	✓	✓
Fully Adjustable Halogen Work Lights (×8)	✓	✓	✓
Cab, Fully Glazed	—	✓	✓
Cab, Part Glazed (front window)	✓	—	—
Gauge Cluster	✓	✓	✓
Horn, Front	✓	✓	✓

	Canopy Plus	Standard	Deluxe
Horn, Rear	✓	✓	✓
Instrument Panel Vandal Guard	✓	✓	✓
Internal Power Socket (×1)	✓	✓	✓
Rear Tail Lights (LED)	—	✓	✓
Rear Tail Lights (Bulbs)	✓	—	—
Left and Right Opening Doors	—	✓	✓
Left Hand Storage Console	✓	✓	✓
Safety Lock, Hydraulics	✓	✓	✓
Safety Lock, Transmission	✓	✓	✓
Seat, Fabric	—	✓	—
Seat, Deluxe Fabric Heated	—	Optional	Optional
Seat, Deluxe Fabric	—	—	✓
Seat, Vinyl with Mechanical Suspension	✓	—	—
Security Keypad	Optional	Optional	Optional
Self-cancelling Directional Indicator	✓	✓	✓
Steering Wheel Column, Tilt and Telescopic Adjustment	—	—	✓
Steering Wheel Column, Tilt Adjustment	✓	✓	—
Window Wipers, Rear	—	✓	✓
Window Wipers, Front	✓	✓	✓

*May vary depending on region

For more complete information on Cat products, dealer services, and industry solutions, visit us on the web at **www.cat.com**

AEHQ7434 (07-2015)

© 2015 Caterpillar
All rights reserved

Materials and specifications are subject to change without notice. Featured machines in photos may include additional equipment. See your Cat dealer for available options.

CAT, CATERPILLAR, SAFETY.CAT.COM, their respective logos, “Caterpillar Yellow” and the “Power Edge” trade dress, as well as corporate and product identity used herein, are trademarks of Caterpillar and may not be used without permission.